WARNING

THIS INFORMATION MANUAL MAY BE USED FOR GENERAL INFORMATION PURPOSES ONLY.

THIS INFORMATION MANUAL IS NOT KEPT CURRENT. IT MUST NOT BE USED AS A SUBSTITUTE FOR THE OFFICIAL FAA APPROVED PILOT'S OPERATING HANDBOOK REQUIRED FOR OPERATION OF THE AIRPLANE.

Piper®

PIPER PILOT

PA-28-181

SN 28020001 AND UP
with Garmin G3X System

INFORMATION MANUAL

MANUAL PART NUMBER 767-110

Published by
TECHNICAL PUBLICATIONS
Piper Aircraft, Inc.
Issued: November 16, 2020
© 2020 Piper Aircraft, Inc.
All Rights Reserved

APPLICABILITY

Application of this handbook is limited to the specific Piper Pilot PA-28-181 model airplane designated by serial number and registration number on the face of the title page of this handbook.

WARNING

EXTREME CARE MUST BE EXERCISED TO LIMIT THE USE OF THIS HANDBOOK TO APPLICABLE AIRCRAFT. THIS HANDBOOK IS VALID FOR USE WITH THE AIRPLANE IDENTIFIED ON THE FACE OF THE TITLE PAGE. SUBSEQUENT REVISIONS SUPPLIED BY PIPER MUST BE PROPERLY INSERTED.

WARNING

This handbook cannot be used for operational purposes unless kept in a current status.

WARNING

Inspection, maintenance and parts requirements for all non-PIPER APPROVED STC installations are not included in this handbook. When a non-PIPER APPROVED STC installation is incorporated on the airplane, those portions of the airplane affected by the installation must be inspected in accordance with the inspection program published by the owner of the STC. Since non-PIPER APPROVED STC installations may change systems interface, operating characteristics and component loads or stresses on adjacent structures, PIPER provided inspection criteria may not be valid for airplanes with non-PIPER APPROVED STC installations.

REVISIONS

The information compiled in the Pilot's Operating Handbook, with the exception of the equipment list, will be kept current by revisions distributed to the airplane owners. The equipment list was current at the time the airplane was certified by the manufacturer and thereafter must be maintained by the owner.

Revision material will consist of information necessary to update the text of the present handbook and/or to add information to cover added airplane equipment.

I. Revisions

Revisions will be distributed whenever necessary as complete page replacements or additions and shall be inserted into the handbook in accordance with the instructions given below:

1. Revision pages will replace only pages with the same page number.
2. Insert all additional pages in proper numerical order within each section.
3. Insert page numbers followed by a small letter in direct sequence with the same common numbered page.

II. Identification of Revised Material

Revised text and illustrations are indicated by a black vertical line located along the outside margin of each revised page opposite the revised, added, or deleted information. A black vertical line next to the page number indicates that an entire page has been changed or added.

Black vertical lines indicate current revisions only. Correction of typographical or grammatical errors or the physical relocation of information on a page will not be indicated by a symbol.

ORIGINAL PAGES ISSUED

The original pages issued for this handbook prior to revision are given below:

Title, ii through viii, 1-1 through 1-26, 2-1 through 2-22, 3-1 through 3-52, 4-1 through 4-26, 5-1 through 5-34, 6-1 through 6-12, 7-1 through 7-50, 8-1 through 8-20, 9-1 through 9-4, 10-1 through 10-2.

PILOT'S OPERATING HANDBOOK LOG OF REVISIONS

Current Revisions to the PA-28-181 Piper Pilot Pilot's Operating Handbook, REPORT: VB-2960 issued November 16, 2020.

Revision Number and Code	Revised Pages	Description of Revisions	FAA Approval Signature and Date

PILOT'S OPERATING HANDBOOK LOG OF REVISIONS (continued)

Revision Number and Code	Revised Pages	Description of Revisions	FAA Approval Signature and Date

TABLE OF CONTENTS

SECTION 1	GENERAL
SECTION 2	LIMITATIONS
SECTION 3	EMERGENCY PROCEDURES
SECTION 4	NORMAL PROCEDURES
SECTION 5	PERFORMANCE
SECTION 6	WEIGHT AND BALANCE
SECTION 7	DESCRIPTION AND OPERATION OF THE AIRPLANE AND ITS SYSTEMS
SECTION 8	AIRPLANE HANDLING, SERVICING AND MAINTENANCE
SECTION 9	SUPPLEMENTS
SECTION 10	OPERATING TIPS

THIS PAGE INTENTIONALLY LEFT BLANK

TABLE OF CONTENTS
SECTION 1
GENERAL

Paragraph No.		Page No.
1.1	Introduction	1-1
1.3	Notations	1-3
1.5	Engine	1-5
1.7	Propeller	1-5
1.9	Fuel	1-5
1.11	Oil	1-6
1.13	Maximum Weights	1-6
1.15	Standard Airplane Weights	1-6
1.17	Reserved	1-6
1.19	Specific Loadings	1-7
1.21	GNSS (GPS/SBAS) Navigation System Equipment Approvals	1-7
1.23	Symbols, Abbreviations and Terminology	1-20

THIS PAGE INTENTIONALLY LEFT BLANK

SECTION 1

GENERAL

1.1 INTRODUCTION

This Pilot's Operating Handbook is designed for maximum utilization as an operating guide for the pilot. It includes the material required to be furnished to the pilot by F.A.R./C.A.R. It also contains supplemental data supplied by the airplane manufacturer.

This handbook is not designed as a substitute for adequate and competent flight instruction, knowledge of current airworthiness directives, applicable federal air regulations or advisory circulars. It is not intended to be a guide for basic flight instruction or a training manual and should not be used for operational purposes unless kept in a current status.

Assurance that the airplane is in an airworthy condition is the responsibility of the owner. The pilot in command is responsible for determining that the airplane is safe for flight. The pilot is also responsible for remaining within the operating limitations as outlined by instrument markings, placards, and this handbook.

Although the arrangement of this handbook is intended to increase its in-flight capabilities, it should not be used solely as an occasional operating reference. Pilots should study the entire handbook to familiarize themselves with the limitations, performance, procedures and operational handling characteristics of the airplane before flight.

The handbook has been divided into numbered sections, each provided with a "finger-tip" tab divider for quick reference. The limitations and emergency procedures have been placed ahead of the normal procedures, performance and other sections to provide easier access to information that may be required in flight. The "Emergency Procedures" Section has been furnished with a red tab divider to present an instant reference to the section. Provisions for expansion of the handbook have been made by the deliberate omission of certain paragraph numbers, figure numbers, item numbers and pages noted as being intentionally left blank.

THIS PAGE INTENTIONALLY LEFT BLANK

1.3 NOTATIONS

WARNING

Operating procedures or techniques which may result in personal injury or loss of life if not carefully followed or a hazard which may require immediate crew recognition and corrective action.

CAUTION

Operating procedures or techniques which may result in damage to equipment if not carefully followed or the need for immediate crew awareness and possible need for future corrective action.

NOTE

Supplemental information or highlights considered of sufficient significance to require emphasizing.

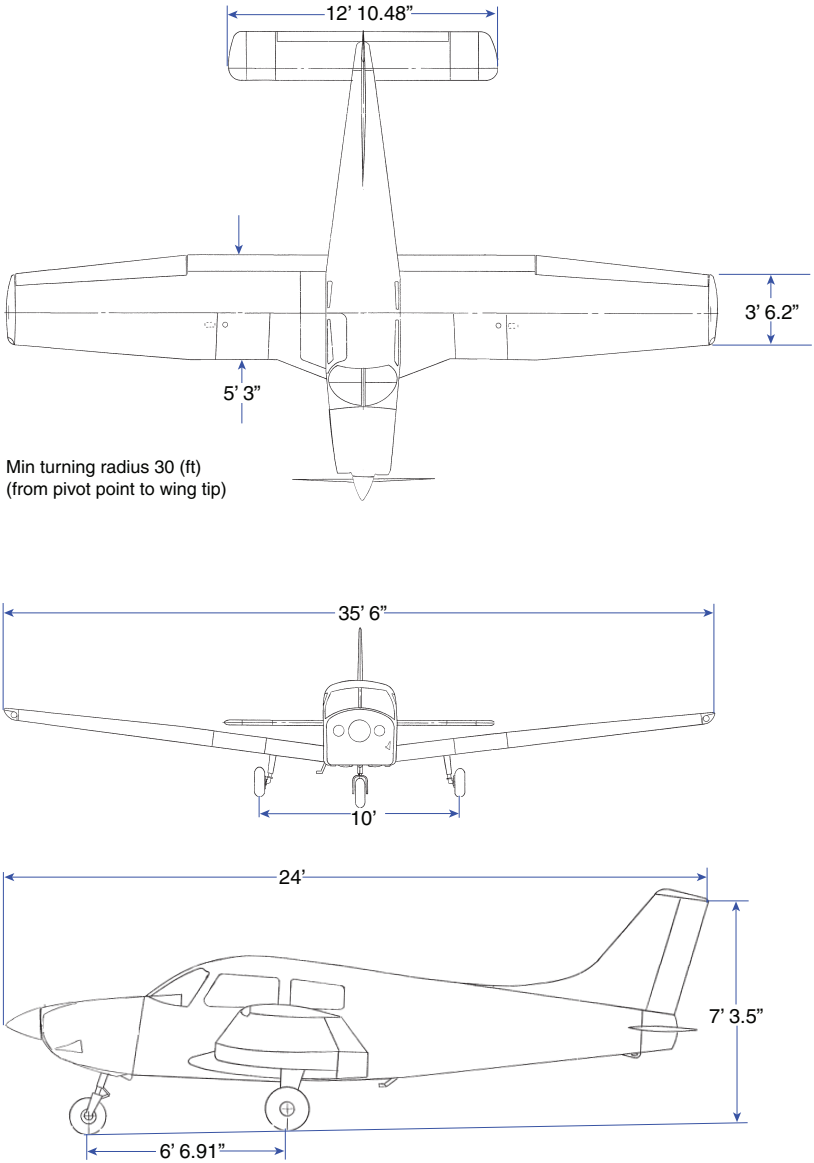

THREE VIEW
Figure 1-1

1.5 ENGINE

(a)	Number of Engines	1
(b)	Engine Manufacturer	Lycoming
(c)	Engine Model Number	
	(1) Fuel Injected	IO-360-B4A
(d)	Takeoff Power (BHP)	180
(e)	Takeoff Power Engine Speed (RPM)	2700
(f)	Bore (inches)	5.125
(g)	Stroke (inches)	4.375
(h)	Displacement (cubic inches)	361.0
(i)	Compression Ratio	8.5:1
(j)	Engine Type	Four Cylinder, Direct Drive, Horizontally Opposed with Fuel Injection

1.7 PROPELLER

(a)	Number of Propellers	1
(b)	Propeller Manufacturer	Sensenich
(c)	Model	76EM8S14-0-62
(d)	Number of Blades	2
(e)	Propeller Diameter (inches)	
	(1) Maximum	76
	(2) Minimum	76
(f)	Propeller Type	Fixed Pitch

1.9 FUEL

AVGAS ONLY

(a)	Fuel Capacity (U.S. gal.) (total)	50
(b)	Usable Fuel (U.S. gal.) (total)	48
(c)	Fuel	
	(1) Minimum Octane	100 Green or 100LL Blue Aviation Grade

1.11 OIL

(a) Oil Capacity (U.S. quarts) 8
(b) Oil Specification Refer to latest issue of Lycoming Service Instruction 1014.
(c) Oil Viscosity per Average Ambient Air Temperature at Startup.

Average Ambient Air Temperature	SAE J1966 Non-Dispersant SAE Grades	SAE J1899 Ashless Dispersant SAE Grades
All Temperatures	20W-50	15W-50, 20W-50 or 25W-60
Above 80°F	60	60
Above 60°F	50	40 or 50
30°F to 90°F	40	40
0°F to 70°F	30	30 or 40
0°F to 90°F	20W-50	20W-50 or 15W-50
Below 10°F	20W-50	30

When operating temperatures overlap indicated ranges, use the lighter grade oil.

NOTE

Refer to the latest issue of Lycoming Service Instruction 1014 (Lubricating Oil Recommendations) for further information.

1.13 MAXIMUM WEIGHTS

	Normal
(a) Maximum Ramp Weight (lbs.)	2558
(b) Maximum Takeoff Weight (lbs.)	2550
(c) Maximum Landing Weight (lbs.)	2550

1.15 STANDARD AIRPLANE WEIGHTS

Refer to Figure 6-5 for the Standard Empty Weight and the Useful Load.

1.17 RESERVED

1.19 SPECIFIC LOADINGS

(a)	Wing Loading (lbs. per sq. ft.)	15.0
(b)	Power Loading (lbs. per hp)	14.2

1.21 GNSS (GPS/SBAS) NAVIGATION SYSTEM EQUIPMENT APPROVALS

The Garmin GNSS navigation system installed in this airplane is a GPS system with a Satellite Based Augmentation System (SBAS). This GNSS navigation system is comprised of one Garmin GDU 460 display, one TSO-C145c Class 3 approved Garmin GNX 375 navigator, and a GA37 GPS/SBAS antenna.

The Garmin GNX 375 Navigator, as installed in this airplane, complies with the requirements of AC 20-138D and has airworthiness approval for navigation using GPS and GPS/SBAS (within the coverage of a Satellite Based Augmentation System complying with ICAO Annex 10) for IFR en-route, terminal area, non-precision approach, and approach procedures with vertical guidance operations.

When the internal G3X GPS is used as the primary source of navigation , only VFR operations are approved. A cyan ‘INT’ and magenta ‘VFR’ annunciation are displayed on the HSI when using the G3X GPS internal navigation function.

The Garmin GDU 460 display and GNX 375 Navigator GNSS navigation system as installed in this airplane complies with the equipment, performance, and functional requirements established for the following navigation specifications.

1.21 GNSS (GPS/SBAS) NAVIGATION SYSTEM EQUIPMENT APPROVALS (continued)

Navigation Specification	Operational Requirements/ Authorizations	Reference Documents	ICAO Flight Plan Code		Notes
			Item 10a Code	Item 18 PBN/	
RNAV 10 RNP 10 Oceanic and Remote Areas of Operation (Class II Navigation)	GNSS FDE/RAIM availability must be verified prior to flight. Maximum predicted FDE/RAIM unavailability is 34 minutes. 1 Two GNSS systems required to be operational, (one GNSS system for those routes requiring only one long range navigation system). No time limit using GNSS as the primary navigation sensor. Part 91, Part 91 subpart K, 121, 125, and 135 operators require operational approval.	FAA AC 20-138D. FAA AC 90-105A. FAA AC 91-70B. EASA AMC 20-12.	R	A1	The GPS equipment as installed requires a second GNSS system for Class II navigation in oceanic and remote airspace. Note, the internal Garmin G3X GPS navigation source does not qualify as a second GNSS system for Class II navigation in oceanic and remote airspace. When installed with a qualified second GNSS system, the GNX 375 equipment complies with the requirements for GPS primary means of Class II navigation in oceanic and remote airspace, when used in conjunction with an FDE prediction tool that satisfies the guidance of FAA AC 20-138D and AC 90-105A (or later revision). 1 Additional equipment may be required to obtain operational approval to utilize RNP-10 performance.

1.21 GNSS (GPS/SBAS) NAVIGATION SYSTEM EQUIPMENT APPROVALS (continued)

Navigation Specification	Operational Requirements/ Authorizations	Reference Documents	ICAO Flight Plan Code		Notes
			Item 10a Code	Item 18 PBN/	
B-RNAV / RNAV 5 (Europe)	Must have GNSS/ SBAS capability and availability or GNSS FDE/RAIM availability must be verified prior to flight. Maximum predicted RAIM/ FDE unavailability is 5 minutes. 1 This does not constitute an operational approval.	FAA AC 90-96A CHG 1. EASA AMC 20-4A.	R	B2	

1.21 GNSS (GPS/SBAS) NAVIGATION SYSTEM EQUIPMENT APPROVALS (continued)

Navigation Specification	Operational Requirements/ Authorizations	Reference Documents	ICAO Flight Plan Code		Notes
			Item 10a Code	Item 18 PBN/	
RNP 4 Oceanic and Remote Areas of Operation (Class II Navigation)	GNSS FDE/RAIM availability must be verified prior to flight. Maximum predicted FDE/RAIM unavailability is 25 minutes. 1 Two operational long-range nav systems required, (or one navigation system and one GNSS sensor for those routes requiring only one long-range navigation sensor). No time limit using GNSS as the primary navigation sensor. Part 91, Part 91 subpart K, 121, 125, and 135 operators require operational approval.	FAA AC 20-138D. FAA AC 90-105A. FAA AC 91-70B.	R	L1	The GPS equipment as installed requires a second GNSS system for Class II navigation in oceanic and remote airspace. Note, the internal Garmin G3X GPS navigation source does not qualify as a second GNSS system for Class II navigation in oceanic and remote airspace. When installed with a qualified second GNSS system, the GNX 375 equipment complies with the requirements for GPS primary means of Class II navigation in oceanic and remote airspace, when used in conjunction with an FDE prediction tool that satisfies the guidance of FAA AC 20-138D and AC 90-105A (or later revision). 1 Additional equipment may be required to obtain operational approval to utilize RNP-4 performance.

1.21 GNSS (GPS/SBAS) NAVIGATION SYSTEM EQUIPMENT APPROVALS (continued)

Navigation Specification	Operational Requirements/ Authorizations	Reference Documents	ICAO Flight Plan Code		Notes
			Item 10a Code	Item 18 PBN/	
RNAV 2	Must have GNSS/ SBAS capability and availability or GNSS FDE/RAIM availability must be verified prior to flight. Maximum predicted RAIM/ FDE unavailability is 5 minutes. 1 The GNSS RNAV system is installed and meets the performance and functional requirements of AC 90-100A CHG 2. In accordance with AC 90-100A, CHG 2, Part 91 operators (except subpart K) following the aircraft and training guidance in AC 90-100A CHG 2 are authorized to fly RNAV 2 procedures. Part 91 subpart K, 121, 125, 129, and 135 operators require operational approval.	FAA AC 20-138D. FAA AC 90-100A CHG 2.	R	C2	Includes RNAV Q and T routes.

1.21 GNSS (GPS/SBAS) NAVIGATION SYSTEM EQUIPMENT APPROVALS (continued)

Navigation Specification	Operational Requirements/ Authorizations	Reference Documents	ICAO Flight Plan Code		Notes
			Item 10a Code	Item 18 PBN/	
RNAV 1	Must have GNSS/ SBAS capability and availability or GNSS FDE/RAIM availability must be verified prior to flight. Maximum predicted RAIM/ FDE unavailability is 5 minutes. [1] The GNSS RNAV system is installed and meets the performance and functional requirements of AC 90-100A CHG 2. In accordance with AC 90-100A, CHG 2, Part 91 operators (except subpart K) following the aircraft and training guidance in AC 90-100A CHG 2 are authorized to fly RNAV 1 procedures. Part 91 subpart K, 121, 125, 129, and 135 operators require operational approval.	FAA AC 20-138D. FAA AC 90-100A CHG 2.	R	D2	Includes RNAV terminal departure and arrival procedures and approach procedures up to the Final Approach Fix.

1.21 GNSS (GPS/SBAS) NAVIGATION SYSTEM EQUIPMENT APPROVALS (continued)

Navigation Specification	Operational Requirements/ Authorizations	Reference Documents	ICAO Flight Plan Code		Notes
			Item 10a Code	Item 18 PBN/	
P-RNAV (Europe)	GNSS receiver is required for takeoff in P-RNAV airspace. Must have GNSS/ SBAS capability and availability or GNSS FDE/RAIM availability must be verified prior to flight. This does not constitute an operational approval.	FAA AC 20-138D. FAA AC 90-96A CHG 1. JAA TGL10 Rev 1.	R	D2	ICAO flight plan code for P-RNAV no longer exists. P-RNAV utilizes RNAV 1 flight plan codes.
RNP 1	Procedures containing Radius-to-Fix (RF) legs are not authorized. Must have GNSS/ SBAS capability and availability or GNSS FDE/RAIM availability must be verified prior to flight. Maximum predicted RAIM/ FDE unavailability is 5 minutes. [1] In accordance with AC 90-105A, Part 91 operators (except subpart K), following the aircraft and training guidance in AC 90-105A are authorized to fly RNP 1 procedures.	FAA AC 20-138D. FAA AC 90-105A.	R	O2	Includes RNP terminal departure and arrival procedures and approach procedures up to the Final Approach Fix.

1.21 GNSS (GPS/SBAS) NAVIGATION SYSTEM EQUIPMENT APPROVALS (continued)

Navigation Specification	Operational Requirements/ Authorizations	Reference Documents	ICAO Flight Plan Code		Notes
			Item 10a Code	Item 18 PBN/	
RNP 1 (continued)	Part 91 subpart K, 121, 125, 129, and 135 operators require operational approval.	(continued)	(cont.)	(cont.)	(continued)
RNP APCH LNAV minima	Procedures containing Radius-to-Fix (RF) legs are not authorized. Must have GNSS/ SBAS capability and availability or GNSS FDE/RAIM availability must be verified prior to flight. Maximum predicted RAIM/ FDE unavailability is 5 minutes. 1 All instrument approach procedures that are retrieved from the current navigation database are authorized. In accordance with AC 90-105A, Part 91 operators (except subpart K), following the aircraft and training guidance in AC 90-105A are authorized to fly RNP APCH LNAV minima procedures. Part 91 subpart K, 121, 125, 129, and 135 operators require operational approval.	FAA AC 20-138D. FAA AC 90-105A. EASA AMC 20-27A.	R	S1	Includes non-precision approaches based on conventional navigation aids with “or GPS” in the title and area navigation approaches titled “GPS”, “RNAV (GPS)”, and “RNAV (GNSS)”.

1.21 GNSS (GPS/SBAS) NAVIGATION SYSTEM EQUIPMENT APPROVALS (continued)

Navigation Specification	Operational Requirements/ Authorizations	Reference Documents	ICAO Flight Plan Code		Notes
			Item 10a Code	Item 18 PBN/	
RNP APCH LNAV/ VNAV minima	Procedures containing Radius-to-Fix (RF) legs are not authorized. Must have GNSS/ SBAS capability and availability or GNSS FDE/RAIM availability must be verified prior to flight. Maximum predicted RAIM/ FDE unavailability is 5 minutes. [1] All instrument approach procedures that are retrieved from the current navigation database are authorized. In accordance with AC 90-105A, Part 91 operators (except subpart K), following the aircraft and training guidance in AC 90-105A are authorized to fly RNP APCH LNAV/VNAV minima procedures. Part 91 subpart K, 121, 125, 129, and 135 operators require operational approval. This aircraft is not authorized to perform Barometric Based Vertical Guidance (baro-VNAV) approaches.	FAA AC 20-138D. FAA AC 90-105A. EASA AMC 20-27A with CM-AS-002.	R	S2	Includes area navigation approaches titled “RNAV (GPS)” and “RNAV (GNSS).” Vertical guidance is based on GPS/SBAS when within SBAS coverage. The aircraft complies with the criteria of AMC 20-27 for RNP approaches to LNAV/ VNAV minima, with the exception that VNAV is based on SBAS/GNSS geometric altitude when SBAS/GNSS is available and authorized

1.21 GNSS (GPS/SBAS) NAVIGATION SYSTEM EQUIPMENT APPROVALS (continued)

Navigation Specification	Operational Requirements/ Authorizations	Reference Documents	ICAO Flight Plan Code		Notes
			Item 10a Code	Item 18 PBN/	
RNP APCH LP minima	Procedures containing Radius-to-Fix (RF) Legs are not authorized. All instrument approach procedures that are retrieved from the current navigation database are authorized. In accordance with AC 90-107, Part 91 operators (except subpart K), following the operational considerations and training guidance in AC 90-107 are authorized to fly RNP APCH LP minima procedures. Part 91 subpart K, 121, 125, 129, and 135 operators require operational approval.	FAA AC 20-138D. FAA AC 90-107.	N/A	N/A	Includes area navigation approaches titled “RNAV (GPS)” and “RNAV (GNSS)”. GNSS/SBAS capability and availability is required for LP procedures.

1.21 GNSS (GPS/SBAS) NAVIGATION SYSTEM EQUIPMENT APPROVALS (continued)

Navigation Specification	Operational Requirements/ Authorizations	Reference Documents	ICAO Flight Plan Code		Notes
			Item 10a Code	Item 18 PBN/	
RNP APCH LPV minima	Procedures containing Radius-to-Fix (RF) Legs are not authorized. All instrument approach procedures that are retrieved from the current navigation database are authorized. In accordance with AC 90-107, Part 91 operators (except subpart K), following the aircraft and training guidance in AC 90-107 are authorized to fly RNP APCH LPV minima procedures. Part 91 subpart K, 121, 125, 129, and 135 operators require operational approval.	FAA AC 20-138D. FAA AC 90-107. EASA AMC 20-28.	B	N/A	Includes area navigation approaches titled “RNAV (GPS)” and “RNAV (GNSS).” GNSS/SBAS capability and availability is required for LPV procedures.
RNP AR APCH					Not Authorized.

1.21 GNSS (GPS/SBAS) NAVIGATION SYSTEM EQUIPMENT APPROVALS (continued)

Navigation Specification	Operational Requirements/ Authorizations	Reference Documents	ICAO Flight Plan Code		Notes
			Item 10a Code	Item 18 PBN/	
Advanced RNP See Notes for specific Advanced RNP functions.	This does not constitute an operational approval.	FAA AC 20-138D.	N/A	N/A	RNAV Holding: Supported. RF Legs: Not supported. Parallel Offsets: RNP-4 parallel offsets as defined by AC 20-138D Chapter 10 are supported. Advanced RNP parallel offsets as defined by AC20-138D Appendix 3 are supported. Higher Continuity: Not supported. Scalable RNP: Not supported. Fixed Radius Transitions (FRT): Not supported. Time of Arrival Control (TOAC): Not supported.

1.21 GNSS (GPS/SBAS) NAVIGATION SYSTEM EQUIPMENT APPROVALS (continued)

1. FDE/RAIM availability worldwide can be determined via the following:
   - An FDE prediction tool that satisfies the guidance of FAA AC 20-138D and AC 90-105A (or later revision), such as the Garmin WFDE Prediction program, part number 006-A0154-01 or later approved version with GPS SW >= 3.0 selected.

Also, within the United States:

- Via the FAA's RAIM Service Availability Prediction Tool (SAPT) website: http://sapt.faa.gov.
- Contacting a Flight Service Station (not DUATS) to obtain non-precision approach RAIM.

Also, within Europe:

- Using the Garmin WFDE Prediction program,
- An FDE prediction tool that satisfies the guidance of FAA AC 20-138D and AC 90-105A (or later revision).
- Europe's AUGER GPS RAIM Prediction Tool at http://augur.ecacnav.com/augur/app/home.

Verification of FDE/RAIM availability is not necessary if SBAS coverage is confirmed to be available along the entire route of flight.

Garmin International holds an FAA Type 2 Letter of Acceptance (LOA) in accordance with AC 20-153A for database integrity, quality, and database management practices for the navigation database. Flight crews and operators can view the LOA status at FlyGarmin.com then select "Aviation Database Declarations".

Navigation information is referenced to the WGS-84 reference system.

1.23 SYMBOLS, ABBREVIATIONS AND TERMINOLOGY

The following definitions are of symbols, abbreviations and terminology used throughout the handbook and those which may be of added operational significance to the pilot.

(a) General Airspeed Terminology and Symbols

CAS	Calibrated Airspeed means the indicated speed of an aircraft, corrected for position and instrument error. Calibrated airspeed is equal to true airspeed in standard atmosphere at sea level.
KCAS	Calibrated Airspeed expressed in Knots.
GS	Ground Speed is the speed of an airplane relative to the ground.
IAS	Indicated Airspeed is the speed of an aircraft as shown on the airspeed indicator when corrected for instrument error. IAS values published in this handbook assume zero instrument error.
KIAS	Indicated Airspeed expressed in Knots.
TAS	True Airspeed is the airspeed of an airplane relative to undisturbed air which is the CAS corrected for altitude, temperature and compressibility.
V_O	Maximum operating Maneuvering Speed is the maximum speed at which application of full available aerodynamic control will not overstress the airplane. **NOTE** V_O is defined in accordance with FAR23 Amendment 45.
V_{FE}	Maximum Flap Extended Speed is the highest speed permissible with wing flaps in a prescribed extended position.

1.23 SYMBOLS, ABBREVIATIONS AND TERMINOLOGY (continued)

V_{NE}	Never Exceed Speed is the speed limit that may not be exceeded at any time.
V_{NO}	Maximum Structural Cruising Speed is the speed that should not be exceeded except in smooth air and then only with caution.
V_S	Stalling Speed or the minimum steady flight speed at which the airplane is controllable.
V_{SO}	Stalling Speed or the minimum steady flight speed at which the airplane is controllable in the landing configuration.
V_X	Best Angle-of-Climb Speed is the airspeed which delivers the greatest gain of altitude in the shortest possible horizontal distance.
V_Y	Best Rate-of-Climb Speed is the airspeed which delivers the greatest gain in altitude in the shortest possible time.

(b) Meteorological Terminology

ISA	International Standard Atmosphere in which: The air is a dry perfect gas; The temperature at sea level is 15° Celsius (59° Fahrenheit); The pressure at sea level is 29.92 inches Hg (1013.2 mb); The temperature gradient from sea level to the altitude at which the temperature is -56.5°C (-69.7°F) is -0.00198C (-0.003564°F) per foot and zero above that altitude.
OAT	Outside Air Temperature is the free air static temperature, obtained either from inflight temperature indications or ground meteorological sources, adjusted for instrument error and compressibility effects.

1.23 SYMBOLS, ABBREVIATIONS AND TERMINOLOGY (continued)

Indicated Pressure Altitude	The number actually read from an altimeter when the barometric subscale has been set to 29.92 inches of mercury (1013.2 millibars).
Pressure Altitude	Altitude measured from standard sea-level pressure (29.92 in. Hg) by a pressure or barometric altimeter. It is the indicated pressure altitude corrected for position and instrument error. In this handbook, altimeter instrument errors are assumed to be zero.
Station Pressure	Actual atmospheric pressure at field elevation.
Wind	The wind velocities recorded as variables on the charts of this handbook are to be understood as the headwind or tailwind components of the reported winds.

(c) Power Terminology

Maximum Continuous Power	Maximum power permissible continuously during flight.
Takeoff Power	Maximum power permissible for takeoff.

(d) Engine Instruments

CHT	Cylinder Head Temperature
EGT	Exhaust Gas Temperature
FFLOW	Fuel Flow
RPM	Propeller Speed

1.23 SYMBOLS, ABBREVIATIONS AND TERMINOLOGY (continued)

(e) Avionics System Abbreviations/Terminology

ADAHRS	Air Data, Attitude and Heading Reference System
ADS-B	Automatic Dependent Surveillance Broadcast
AFCS	Automatic Flight Control System
Bluetooth®	The Bluetooth® word mark and logos are registered trademarks owned by Bluetooth SIG, Inc. and any use of such marks by Garmin Ltd. is under license. Other trademarks and trade names are those of their respective owners.
CAS	Crew Alerting System
EIS	Engine Indication System
ESP	Electronic Stability and Protection
FDE	Fault Detection and Exclusion
FOB	Fuel On Board
GDL	Garmin Datalink
GDU	Garmin Display Unit
GEA	Garmin Engine/Airframe Processing Unit
GFC	Garmin Flight Control System
GMA	Garmin Audio Panel
GMU	Garmin Magnetometer Unit
GNC	Garmin Nav/Com Radio
GNSS	Global Navigation Satellite System
GNX	Garmin GPS Navigator/Transponder
GPS	Global Positioning System
GSU	Garmin Sensor Unit (ADAHRS)
GTX	Garmin Transponder
HSI	Horizontal Situation Indicator
MFD	Multi-Function Display
OAT	Outside Air Temperature

1.23 SYMBOLS, ABBREVIATIONS AND TERMINOLOGY (continued)

(e) Avionics System Abbreviations/Terminology (continued)

PBN	Performance Based Navigation
PFD	Primary Flight Display
PFT	Preflight Test
RAIM	Receiver Autonomous Integrity Monitoring
SBAS	Satellite-Based Augmentation System
TAWS	Terrain Awareness and Warning System
USP	Underspeed Protection
VOR	Very High Frequency Omnidirectional Range

1.23 SYMBOLS, ABBREVIATIONS AND TERMINOLOGY (continued)

(f) Airplane Performance and Flight Planning Terminology

Accelerate-Stop Distance	The distance required to accelerate an airplane to a specified speed and, assuming failure of an engine at the instant that speed is attained, to bring the airplane to a stop.
Climb Gradient	The demonstrated ratio of the change in height during a portion of a climb, to the horizontal distance traversed in the same time interval.
Demonstrated Crosswind Velocity (Demo. X-Wind)	The demonstrated crosswind velocity is the velocity of the crosswind component for which adequate control of the airplane during takeoff and landing was actually demonstrated during certification tests.
nm	Nautical Miles
Route Segment	A part of a route. Each end of that part is identified by: (1) a geographical location; or (2) a point at which a definite radio fix can be established.

(g) Weight and Balance Terminology

Arm	The horizontal distance from the reference datum to the center of gravity (C.G.) of an item.
Center of Gravity (C.G.)	The point at which an airplane would balance if suspended. Its distance from the reference datum is found by dividing the total moment by the total weight of the airplane.
C.G. Arm	The arm obtained by adding the airplane's individual moments and dividing the sum by the total weight.
C.G. Limits	The extreme center of gravity locations within which the airplane must be operated at a given weight.

1.23 SYMBOLS, ABBREVIATIONS AND TERMINOLOGY (continued)

(g) Weight and Balance Terminology (continued)

Datum	An imaginary vertical plane from which all horizontal distances are measured for balance purposes.
Basic Empty Weight	Standard empty weight plus optional equipment.
Maximum Landing Weight	Maximum weight approved for the landing touchdown.
Maximum Ramp Weight	Maximum weight approved for ground maneuver. (It includes weight of start, taxi and run up fuel.)
Maximum Takeoff Weight	Maximum weight approved for the start of the takeoff run.
Maximum Zero Fuel Weight	Maximum weight exclusive of usable fuel.
Moment	The product of the weight of an item multiplied by its arm. (Moment divided by a constant is used to simplify balance calculations by reducing the number of digits.)
Payload	Weight of occupants, cargo and baggage.
Standard Empty Weight	Weight of a standard airplane including unusable fuel, full operating fluids and full oil.
Station	A location along the airplane fuselage usually given in terms of distance from the reference datum.
Unusable Fuel	Fuel remaining after a runout test has been completed in accordance with governmental regulations.
Usable Fuel	Fuel available for flight planning.
Useful Load	Difference between takeoff weight, or ramp weight is applicable, and basic empty weight.

TABLE OF CONTENTS
SECTION 2
LIMITATIONS

Paragraph No.		Page No.
2.1	General	2-1
2.3	Airspeed Limitations	2-1
2.5	Airspeed Indicator Markings	2-2
2.7	Powerplant Limitations	2-3
2.9	Powerplant Instrument Markings	2-4
2.11	Systems Limitations	2-4
2.13	Weight Limits	2-4
2.15	Center of Gravity Limits	2-5
2.17	Maneuver Limits	2-6
2.19	Flight Load Factors	2-6
2.21	Types of Operations	2-6
2.23	Fuel Limitations	2-6
2.25	Garmin G3X Navigation System Limitations	2-7
2.27	GFC 500 Automatic Flight Control System (AFCS)	2-18
2.29	Standby Instrument Limitations	2-19
2.31	Headset	2-19
2.33	Maximum Seating Configuration	2-19
2.35	Placards	2-20

THIS PAGE INTENTIONALLY LEFT BLANK

SECTION 2

LIMITATIONS

2.1 GENERAL

This section provides the FAA Approved operating limitations, instrument markings, color coding and basic placards necessary for operation of the airplane and its systems.

This airplane must be operated as a normal category airplane in compliance with the operating limitations stated in the form of placards and markings and those given in this section and this complete handbook.

Limitations associated with those optional systems and equipment which require handbook supplements can be found in Section 9 (Supplements).

2.3 AIRSPEED LIMITATIONS

SPEED	KIAS	KCAS
Never Exceed Speed (V_{NE}) - Do not exceed this speed in any operation.	154	148
Maximum Structural Cruising Speed (V_{NO}) - Do not exceed this speed except in smooth air and then only with caution.	125	121

2.3 AIRSPEED LIMITATIONS (continued)

CAUTION

Maneuvering speed decreases at lighter weight as the effects of aerodynamic forces become more pronounced. Linear interpolation may be used for intermediate gross weights. Maneuvering speed should not be exceeded while operating in rough air.

SPEED	KIAS	KCAS
Maximum Operating Maneuvering Speed (Vo) - Do not make full or abrupt control movements above this speed.		
At 2550 lbs. G.W.	113	111
At 1917 lbs. G.W.	98	96
Maximum Flaps Extended Speed (V_{FE}) - Do not exceed this speed with the flaps extended.	102	100

2.5 AIRSPEED INDICATOR MARKINGS (PFD AND STANDBY AIRSPEED INDICATOR)

MARKING	KIAS
Red Line (Never Exceed)	154
Yellow Band (Caution Range - Smooth Air Only)	125 to 154
Green Band (Normal Operating Range)	50 to 125
White Band (Flap Down)	45 to 102

2.7 POWERPLANT LIMITATIONS

(a) Number of Engines	1
(b) Engine Manufacturer	Lycoming
(c) Engine Model No.	
(1) Fuel Injected	IO-360-B4A
(d) Engine Operating Limits	
(1) Rated Horsepower (BHP)	180
(2) Max. Propeller Speed (RPM)	2700
(3) Max. Oil Temperature	245ºF
(4) Oil Pressure	
Minimum (red line)	25 PSI
Maximum (red line)	115 PSI
(5) Cylinder Head Temperature	500ºF
(6) Fuel (AVGAS ONLY)	
(minimum grade)	100 or 100LL Aviation Grade
(7) Number of Propellers	1
(8) Propeller Manufacturer	Sensenich
(9) Propeller Model	76EM8S14-0-62
(10) Propeller Diameter (Inches)	
Minimum	76
Maximum	76
(11) Propeller Tolerance @ ISA Conditions	
(static RPM at maximum permissible	Not above 2340 RPM
throttle setting at sea level)	Not below 2240 RPM

2.9 POWERPLANT INSTRUMENT MARKINGS

(a)	Tachometer	
	Green Arc (Normal Operating Range)	500 to 2700 RPM
	Red Line (Maximum)	2700 RPM
(b)	Oil Temperature	
	Green Band (Normal Operating Range)	75° to 245°F
	Red Line (Maximum)	245°F
(c)	Oil Pressure	
	Green Band (Normal Operating Range)	55 to 95 PSI
	Yellow Band (Caution Range) (Idle)	25 to 55 PSI
	Yellow Band (Ground Warm-Up)	95 to 115 PSI
	Red Line (Minimum)	25 PSI
	Red Line (Maximum)	115 PSI
(d)	Cylinder Head Temperature (CHT)	
	Green Band	200° to 489°F
	Yellow Band	490° to 499°F
	Red Line	500°F

2.11 SYSTEMS LIMITATIONS

(a)	Alternator	70 AMPS

2.13 WEIGHT LIMITS

		Normal
(a)	Maximum Ramp (lbs.)	2558
(b)	Maximum Weight (lbs.)	2550

2.15 CENTER OF GRAVITY LIMITS

Normal Category

Weight Pounds	Forward Limit Inches Aft of Datum	Rearward Limit Inches Aft of Datum
2550	88.6	93.0
2050 (and less)	82.0	93.0

NOTE

Straight line variation between points given.

The datum used is 78.4 inches ahead of the wing leading edge at the inboard intersection of the straight and tapered section.

It is the responsibility of the airplane owner and the pilot to ensure that the airplane is properly loaded. See Section 6 (Weight and Balance) for proper loading instructions.

2.17 MANEUVER LIMITS

(a) Normal Category - All acrobatic maneuvers including spins prohibited.

2.19 FLIGHT LOAD FACTORS

	Normal
(a) Positive Load Factor (Maximum)	3.8 G
(b) Negative Load Factor (Maximum)	-1.5 G

No inverted maneuvers approved

2.21 TYPES OF OPERATION

The airplane is approved for the following operations when equipped in accordance with FAR 91 or FAR 135.

(a) Day V.F.R.
(b) Night V.F.R.
(c) Day I.F.R.
(d) Night I.F.R.
(e) Non Icing

2.23 FUEL LIMITATIONS

(a) Total Capacity	50 U.S. GAL.
(b) Unusable Fuel	2 U.S. GAL.
The unusable fuel for this airplane has been determined as 1.0 gallon in each wing in critical flight attitudes.	
(c) Usable Fuel	48 U.S. GAL.
The usable fuel in this airplane has been determined as 24.0 gallons in each wing.	

2.25 GARMIN G3X NAVIGATION SYSTEM LIMITATIONS

(a) Pilot's Guides

The Garmin G3X Touch Pilot's Guide for Certified Aircraft, P/N 190-02472-00 (latest appropriate revision) must be immediately available to the pilot while operating the airplane.

The GPS 175/GNC 355/GNX 375 Pilot's Guide, P/N 190-02488-01 (latest appropriate revision), must be immediately available to the pilot while operating the airplane.

The G5 Electronic Flight Instrument Pilot's Guide for Certified Aircraft, P/N 190-01112-12 (latest appropriate revision), must be immediately available to the pilot while operating the airplane.

2.25 GARMIN G3X NAVIGATION SYSTEM LIMITATIONS (cont.)

(b) System Software Requirements.

The avionics components must utilize the following or later FAA approved software versions:

Component	Identification Software	Software Version
GDU	Garmin Display Unit	8.64
GMA	Audio Panel	2.70
GSU	Air Data and Attitude Heading Reference System	2.20
GEA	Engine Airframe Interface Unit	3.70
GMU	Magnetometer Unit	2.00
GSA	Autopilot Servo Actuator	4.70
GMC	Autopilot Mode Controller	2.90
GAD	ARINC Adapter	3.20
GNC	VHF Nav/Com Radio	2.20
GTR	VHF Com Radio	3.30
GNX	Main	3.10
	Transponder	2.54
	Global Positioning System	8.00

IFR Operations are prohibited if:

- The G3X internal GPS is used as the primary navigation source.

NOTE

Use of the Internal G3X GPS navigation source is indicated by a cyan 'INT' and magenta 'VFR' annunciation displayed on the HSI.

- ADAHRS is not receiving valid GPS signals or Air Data.
- The GNX 375 moving map and CDI depiction are being used for course guidance.

2.25 GARMIN G3X NAVIGATION SYSTEM LIMITATIONS (cont.)

(c) Databases

Navigation Database

GPS/SBAS based IFR enroute, oceanic and terminal navigation predicated upon the Garmin GNX 375 GPS Receiver is prohibited unless the pilot uses a valid, compatible, and current navigation database or verifies each selected waypoint for accuracy by reference to current data.

Instrument approach navigation predicated upon the Garmin GNX 375 GPS Receiver must be accomplished in accordance with approved instrument approach procedures that are retrieved from the GNX 375 navigation database. The GNX 375 navigation database must incorporate the current update cycle or each waypoint must be verified for accuracy with current approach chart data.

Not all published Instrument Approach Procedures (IAP) are in the navigation database. Flight crews planning to fly an RNAV instrument approach must ensure that the navigation database contains the planned RNAV Instrument Approach Procedure and that approach procedure must be loaded from the navigation database into the GNX 375 system flight plan by its name. Pilots are prohibited from flying any approach path that contains manually entered waypoints.

Database updates via SD card must be done while the aircraft is on the ground and stationary. Database transfers or updates are prohibited in flight.

2.25 GARMIN G3X NAVIGATION SYSTEM LIMITATIONS (cont.)

(d) Flight Planning

In areas where GPS SBAS coverage is not available, the pilot must verify RAIM availability. See Section 1.21 for available FDE/RAIM prediction programs.

For operations within the U.S. National Airspace System on RNP and RNAV procedures when GPS SBAS signals are not available, the availability of GPS RAIM shall be confirmed for the intended route of flight. In the event of a predicted continuous loss of RAIM of more than five minutes for any part of the intended route of flight, the flight should be delayed, canceled, or re-routed on a track where RAIM requirements can be met.

For operations within European B-RNAV/RNAV 5 and P-RNAV airspace, if more than one satellite is scheduled to be out of service, then the availability of FDE/RAIM shall be confirmed for the intended flight (route and time). In the event of a predicted continuous loss of FDE/RAIM of more than five minutes for any part of the intended flight, the flight shall be delayed, canceled, or rerouted on a track where FDE/RAIM requirements can be met.

For operations where the route requires oceanic/remote area (Class II) navigation and the aircraft is properly equipped with the required number of GNSS systems, the aircraft's operator or flight crew must determine that FDE/RAIM will be available along the intended route of flight. If FDE/RAIM will be unavailable for more than 34 minutes for RNP-10 airspace or 25 minutes for RNP-4 airspace, then the operation must be rescheduled when FDE/RAIM is available.

When RAIM is required for GPS integrity (GPS SBAS not available) during instrument meteorological conditions (IMC), other non-GPS navigation equipment appropriate to the operation, must be available.

2.25 GARMIN G3X NAVIGATION SYSTEM LIMITATIONS (cont.)

(e) Enroute

Whenever possible, RNP and RNAV routes including Standard Instrument Departures (SIDs) and Obstacle Departure Procedures (ODPs), Standard Terminal Arrival (STAR), and enroute RNAV "Q" and RNAV "T" routes should be loaded into the flight plan from the database in their entirety, rather than loading route waypoints from the database into the flight plan individually. Selecting and inserting individual named fixes from the database is permitted, provided all fixes along the published route to be flown are inserted. Manual entry of waypoints using latitude/longitude or place/ bearing is prohibited.

Navigation information is referenced to WGS-84 reference system, and should only be used where the Aeronautical Information Publication (including electronic data and aeronautical charts) conform to WGS-84 or equivalent.

2.25 GARMIN G3X NAVIGATION SYSTEM LIMITATIONS (cont.)

(f) Approaches

(1) Vertical Guidance

Advisory vertical guidance deviation information is only an aid to help pilots comply with altitude restrictions. When using advisory vertical guidance, the pilot must use the primary barometric altimeter to ensure compliance with all altitude restrictions, particularly during instrument approach operations.

When GPS SBAS corrections are unavailable or if operating outside of GPS SBAS coverage, instrument approaches utilizing the GPS receiver will be conducted in the approach mode and Fault Detection and Exclusion mode. Loss of Integrity annunciations must not be displayed at the Final Approach Fix. Vertical guidance from GPS will not be available if GPS SBAS corrections are unavailable or if operating outside of GPS SBAS coverage. GPS SBAS corrections should be selected OFF when operating outside of GPS SBAS system coverage.

2.25 GARMIN G3X NAVIGATION SYSTEM LIMITATIONS (cont.)

(f) Approaches (continued)

(1) Vertical Guidance (continued)

IFR non-precision approach with vertical guidance approval using the GPS/SBAS sensor is limited to published approaches within the U.S. Airspace System. Approaches to airports in other airspace are not approved unless authorized by the appropriate governing authority.

(2) GPS Approaches

See Section 1, paragraph 1.21 for approved GPS operations/ approaches.

(3) Non-GPS Approaches

The navigation equipment required to perform instrument approach procedures is indicated by the title of the procedure and notes on the IAP chart. Use of the Garmin GPS/SBAS receivers to provide navigation guidance during the final approach segment of an ILS, LOC, LOC-BC, LDA, SDF, MLS or any other type of approach not approved for “or GPS” navigation is prohibited. When using the Garmin VOR/LOC/GS receivers to fly the final approach segment, VOR/LOC/GS navigation data must be selected and presented on the CDI of the PFD and/or standby instrument.

2.25 GARMIN G3X NAVIGATION SYSTEM LIMITATIONS (cont.)

(g) Attitude and Heading Reference System (AHRS)

AHRS Operational Area

Due to loss of reliable heading indications, IFR Operations are prohibited north of 72°N and south of 70°S latitudes and within the following four regions:

- North of 65° North latitude between longitude 75° W and 120° W.
- North of 70° North latitude between longitude 70° W and 128° W.
- North of 70° North latitude between longitude 85° E and 114° E.
- South of 55° South latitude between longitude 120° E and 165° E.

(h) Magnetic Variation Operational Area

IFR operations are prohibited in areas where the magnetic variation is greater than 99.9 degrees East or West.

(i) ADAHRS Normal Operating Mode

IFR operations are prohibited unless the ADAHRS is receiving valid GPS signals or Air Data.

(j) Navigation Angle

The Magnetic/True Navigation Angle (as selected on the G3X System Units page) must match the navigation angle selected on the GNX 375 GPS/SBAS navigator.

(k) Terrain and Obstacle Display

Maneuvers and navigation must not be based solely on the display of terrain or obstacles on the moving map terrain displays.

Terrain alerts must be inhibited when landing at an airport that is not in the airport database.

2.25 GARMIN G3X NAVIGATION SYSTEM LIMITATIONS (cont.)

(l) Datalink Products (ADS-B In)

Do not use data link weather information for maneuvering in, near, or around areas of hazardous weather. Information provided by data link weather products may not accurately depict current weather conditions.

Do not use the indicated data link weather product age to determine the age of the weather information shown by the data link weather product. Due to time delays inherent in gathering and processing weather data for data link transmission, the weather information shown by the data link weather product may be significantly older than the indicated weather product age.

Do not rely solely upon data link services to provide Temporary Flight Restriction (TFR) or Notice to Airmen (NOTAM) information. Not all TFRs and NOTAMS may be depicted.

(m) Traffic Display

The display of traffic is an aid to visual acquisition and may not be utilized for aircraft maneuvering.

(n) Synthetic Vision (SVX)

Use of the Synthetic Vision display elements alone for aircraft control without reference to the primary flight instruments or the aircraft standby instrument is prohibited.

Use of the Synthetic Vision alone for navigation or obstacle/terrain/traffic avoidance is prohibited.

(o) Moving Maps

Moving map displays (ownship position relative to map features) must not be used as the primary or sole means of navigation or course guidance.

2.25 GARMIN G3X NAVIGATION SYSTEM LIMITATIONS (cont.)

(p) Glide Range Ring

In the event of engine failure or engine malfunction, the Glide Range Ring must not be used to determine gliding distance. Refer to the airplanes' Pilot's Operating Manual / Airplane Flight Manual for engine failure emergency procedures (Section 3) and glide distance data (Section 5).

(q) Powerplant Gauges

Do not depend solely on the fuel flow indication or the fuel totalizer to determine fuel used, fuel remaining, or fuel reserves. The fuel computer functions must not be used as the primary means of determining the quantity of fuel in the tanks.

(r) Weight and Balance

Weight and balance data provided by the G3X Touch is for flight planning purposes only. Consult Section 6 for the official weight and balance data.

(s) Gloves

No device or apparel may cover the pilot's fingers used to operate the G3X Touch display.

(t) Service Required

It is prohibited to initiate flight when a "Service Required" advisory is present on the PFD, MFD, or EIS display.

(u) Portable Electronic Devices

Data provided to a portable electronic device from the G3X Touch Bluetooth® interface is not approved to replace any aircraft display equipment, including navigation or traffic/weather display equipment.

The operator should comply with all operational regulations (91.21) regarding portable electronic devices.

(v) Screenshots

Do not take screenshots of the G3X Touch display while in flight.

2.25 GARMIN G3X NAVIGATION SYSTEM LIMITATIONS (cont.)

(w) Electronic Flight Bag

The G3X has not been approved for use as an Electronic Flight Bag (EFB).

(x) ChartView, FliteCharts, and SafeTaxi®

Do not use SafeTaxi®, Chartview, or FliteCharts functions as the basis for ground maneuvering. SafeTaxi®, Chartview, and FliteCharts functions have not been qualified to be used as an Airport Moving Map Display (AMMD). They are intended to improve pilot situational awareness during ground operations and should only be used by the flight crew to orient themselves on the airport surface.

(y) Minimum fully functional equipment required for flight operations:

Equipment	Number Installed	VFR	IFR
PFD	1	1 (1)	1
GNX 375	1	0	1 (3)
ADAHRS	1	0	1
Magnetometer	1	0	1
Standby Instrument - Attitude	1	0	1
Standby Instrument - Airspeed	1	1 (1)	1
Standby Instrument - Altimeter	1	1 (1)	1
Non-stabilized Magnetic Compass	1	1	1
Engine Indicating System (EIS) (2)	1	1	1

(1) For VFR operations under 14 CFR Part 91, the aircraft must have at least one source of altitude and airspeed information. These may be from either the PFD or the standby instrument.

(2) The following engine indications must be functional on the EIS display: Tachometer, Oil Pressure, Oil Temperature, and Fuel Quantity.

(3) The GNX 375 GPS/Navigator is not required for IFR operations if a functional VHF Nav 2 source with acceptable signal reception is used for course guidance.

2.27 GFC 500 AUTOMATIC FLIGHT CONTROL SYSTEM (AFCS)

1. The autopilot must be disengaged during takeoff and landing.
   The GFC 500 AFCS preflight test must complete successfully prior to use of the autopilot, flight director or manual electric trim.
2. Autopilot minimum engagement heights:
   a. 800 feet AGL during all operations except approach.
   b. 200 feet AGL during approach operations.
3. Autopilot engagement speeds:
   a. Minimum - 65 KIAS
   b. Maximum - 140 KIAS
4. Maximum fuel imbalance during autopilot operations - 10 gal.
5. Maximum autopilot engagement limits:
   Pitch UP: 50°
   Pitch DOWN: 50°
   Roll: +/-75°
6. Autopilot approved for Category 1 precision approaches and non-precision approaches only.

2.29 STANDBY INSTRUMENT LIMITATIONS

NOTE

See Section 2.25 (y) for approved VFR and IFR operations when the G5 standby instrument has an invalid or failed function.

Garmin G5 Standby Instrument

1. The G5 must utilize the following or later FAA approved software versions:

Component	Software Version
G5 Standby Instrument	6.70

2.31 HEADSET

A headset must be worn by the pilot while operating this aircraft.

2.33 MAXIMUM SEATING CONFIGURATION

The maximum seating capacity is 3 (three) persons.

2.35 PLACARDS

In full view of the pilot:

LIMITATIONS

THIS AIRPLANE MUST BE OPERATED AS A NORMAL CATEGORY AIRPLANE IN COMPLIANCE WITH THE OPERATING LIMITATIONS STATED IN THE FORM OF PLACARDS, MARKINGS AND MANUALS.

NO ACROBATIC MANEUVERS, INCLUDING SPINS, APPROVED.

THIS AIRCRAFT APPROVED FOR V.F.R., I.F.R., DAY AND NIGHT FLIGHT WHEN EQUIPPED IN ACCORDANCE WITH THE AIRPLANE FLIGHT MANUAL.

INFORMATION

OIL COOLER WINTERIZATION PLATE TO BE REMOVED WHEN AMBIENT TEMPERATURE EXCEEDS 50° F.

WARNING

TURN OFF STROBE LIGHTS WHEN IN CLOSE PROXIMITY TO GROUND OR DURING FLIGHT THROUGH CLOUD, FOG OR HAZE.

2.35 PLACARDS (continued)

In full view of the pilot:

V_o 113 KIAS AT 2550 LBS.
V_o 98 KIAS AT 1917 LBS.
DEMO X-WIND 17 KTS.

NOTE

Demonstrated crosswind values are NOT limitations.

On the cockpit overhead panel:

On lower left portion of instrument panel:

ALTERNATE STATIC SOURCE - PULL AFT TO OPEN
ALL CABIN VENTS MUST BE CLOSED AND CABIN VENT FAN OFF. HEATER AND DEFROSTER MUST BE ON. OPEN FOR STATIC SYSTEM DRAIN

Adjacent to upper door latch:

ENGAGE LATCH
BEFORE FLIGHT

2.35 PLACARDS (continued)

On the right side of the fuselage aft of the wing:

EXTERNAL POWER
28 VOLTS D.C.
TURN MASTER SWITCH
AND ALL EQUIP. OFF
BEFORE INSERTING
OR REMOVING PLUG

Adjacent to the filler caps:

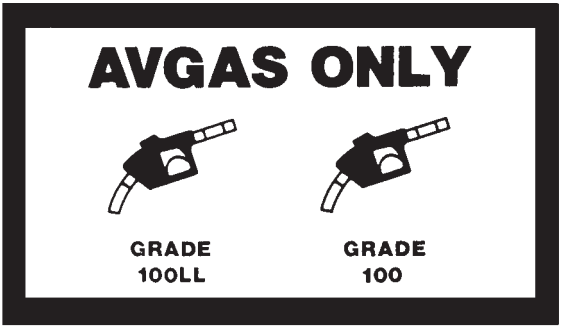

TABLE OF CONTENTS

SECTION 3

EMERGENCY PROCEDURES

Paragraph No.		Page No.
3.1	General	3-1
	Crew Alerting System (CAS) Messages	3-2
	PFD Annunciations and Alerts	3-6
	Aural Alerts	3-10
	Terminology	3-10
3.3	Airspeeds for Safe Operation	3-11
3.5	Emergency Procedures Checklist	3-11
3.5a	Fire	3-11
	Engine Fire During Start	3-11
	Engine Fire in Flight	3-11
	Electrical Fire in Flight	3-13
3.5b	Engine Power Loss	3-14
	Engine Power Loss During Takeoff	3-14
	Engine Power Loss In Flight	3-15
	Power Off Landing	3-16
3.5c	Engine Indicating System (EIS)	3-17
	Oil Pressure	3-17
	Oil Temperature	3-18
	Cylinder Head Temperature	3-19
	Loss of Fuel Flow	3-20
	Fuel Quantity Low	3-21
3.5d	Electrical Failures	3-22
	Alternator Failure	3-22
	Complete Electrical Failure	3-24
3.5e	Avionics Failures	3-26
	PFD Failure	3-26
	ADAHRS Failures	3-28
	ADAHRS Degraded Modes	3-30
	Erroneous or Loss of Engine and Fuel Displays	3-31
	COM Failure	3-32

TABLE OF CONTENTS (continued)

SECTION 3

EMERGENCY PROCEDURES

Paragraph No.		Page No
3.5e	Avionics Failures (continued)	
	Loss of Navigation Data	3-33
	Autopilot or ESP Malfunction	3-34
	Automatic Autopilot Disconnect	3-35
	Electric Pitch Trim Failure	3-36
	Electric Pitch Trim Runaway	3-37
	ESP Activation	3-38
	Autopilot Overspeed Recovery	3-39
	Autopilot Underspeed Recovery	3-40
	Autopilot Out-Of-Trim	3-41
	Abnormal Flight Director Mode Transitions	3-42
	Autopilot Preflight Test Failure	3-43
	Autopilot - Loss Of Navigation Information	3-44
	Autopilot - Loss Of Airspeed Data	3-45
	Autopilot - Loss Of Altitude Data	3-46
	Autopilot - Loss Of GPS Information	3-46
3.5f	Pitot Heat Failure	3-47
3.5g	Starter Engaged	3-48
3.5h	Spin Recovery	3-49
3.5i	Open Door	3-50
3.5j	Engine Roughness	3-51

SECTION 3

EMERGENCY PROCEDURES

3.1 GENERAL

This section provides the recommended procedures for coping with various emergency or critical situations. All of the emergency procedures required by the FAA are presented, along with those procedures that are necessary for operation of the airplane.

Emergency procedures associated with optional systems and equipment are presented in Section 9, Supplements.

Checklists within this section are divided into two distinct parts.

1. The Emergency Procedures Checklists, depicted within boxes, describe action sequences that should be followed during critical situations.
2. When applicable, amplified procedures are provided immediately below the relevant Emergency Procedures Checklist, to enhance the pilot's understanding of the procedure.

Pilots must familiarize themselves with the procedures given in this section and must be prepared to take the appropriate action should an emergency situation arise. The procedures are offered as a course of action for coping with the particular situation or condition described. They are not a substitute for sound judgement and common sense.

Most basic emergency procedures are a normal part of pilot training. The information presented in this section is not intended to replace this training. In order to remain proficient, pilots should periodically review standard emergency procedures.

3.1 GENERAL (continued)

Crew Alerting System (CAS) Messages

The following tables state the color and significance of the Warning, Caution and Advisory messages which may appear on the Garmin G3X Touch display.

To acknowledge the CAS message, touch the active CAS message or press the BACK key.

Warning Messages – Red

CAS Event	CAS Message	Checklist Page	Cause
CAS Warnings with Text Messages			
Alternator Amperage Exceedance	ALT AMPS	N/A	Alternator amperage is in the warning range.
Alternator Failure	ALTR FAIL	3-22	Alternator is turned ON and has failed, as determined by voltage regulator.
Cylinder Head Temperature Exceedance	CHT TEMP	3-19	Cylinder Head Temperature greater than 500°F.
Oil Pressure Exceedance	OIL PRESS	3-17	Oil Pressure less than 25 PSI or greater than 115 PSI.
Oil Temperature Exceedance	OIL TEMP	3-18	Oil Temperature greater than 245°F.
Propeller Overspeed	RPM	N/A	Propeller RPM greater than 2700 RPM.
Starter Engaged	START ENGAGE	3-48	Engine starter engaged.

3.1 GENERAL (continued)

Crew Alerting System (CAS) Messages (continued)

Warning Messages – Red (continued)

CAS Event	CAS Message	Checklist Page	Cause
CAS Warnings with EIS Indications (without Text Messages)			
Battery Voltage	-	N/A	Primary battery voltage less than 24V or greater than or equal to 32V.
Left or Right Fuel Quantity Low	-	N/A	Left or Right fuel quantity less than or equal to 3 gals.

3.1 GENERAL (continued)

Crew Alerting System (CAS) Messages (continued)

Caution Messages - Amber

CAS Event	CAS Message	Checklist Page	Cause
CAS Cautions with Text Messages			
ADC Failure	ADC FAIL ADC REVERT	3-28	The GSU 25 Air Data Computer has failed. Air data from the G5 is being displayed on the G3X Touch.
AHRS Failure	AHRS FAIL AHRS REVERT	3-28	The GSU 25 AHRS has failed. Attitude information from the G5 is being displayed on the G3X Touch.
Altitude Miscompare	ALT MISCOMP	N/A	Conflicting altitude information between the G3X Touch and G5 displays.
Attitude Miscompare	ATT MISCOMP	N/A	Conflicting attitude information between the G3X Touch and G5 displays.
Cylinder Head Temperature	CHT TEMP	3-19	Cylinder Head Temperature between 490°F and 499°F.
EIS Failure	EIS FAIL	3-31	The Garmin Engine Airframe Interface Unit has failed.
Airspeed Miscompare	IAS MISCOMP	N/A	Conflicting airspeed information between the G3X Touch and G5 displays.
Pitot Heat Failure	P HEAT FAIL	3-47	Pitot heat is selected ON and is inoperative.
Pitot Heat OFF	P HEAT OFF	N/A	Pitot heat is selected OFF.

CAS Event	CAS Message	Checklist Page	Cause
CAS Cautions with EIS Indications (without Text Messages)			
Oil Pressure	-	3-17	Oil Pressure pressure between 26 PSI and 55 PSI or between 95 PSI and 115 PSI.

3.1 GENERAL (continued)

Crew Alerting System (CAS) Messages (continued)

Advisory Messages – White

CAS Event	CAS Message	Checklist Page	Cause
CAS Advisories with Text Messages			
Air Data Computer Failure	ALT NO COMP	3-28	The GSU 25 Air Data Computer has failed.
AHRS Failure	ATT NO COMP	3-28	The GSU 25 AHRS has failed.
Air Data Computer Failure	IAS NO COMP	3-28	The GSU 25 Air Data Computer has failed.

3.1 GENERAL (continued)

PFD Annunciations and Alerts

The Garmin G3X System produces a number of PFD annunciations, system messages and aural alerts in addition to the Crew Alerting System (CAS). With the exception of abnormal autopilot disconnects, no pilot action is required to acknowledge PFD annunciations, system messages and alerts. Refer to the G3X Touch Pilot's Guide for Certified Aircraft, P/N 190-02472-00 (latest appropriate revision), for additional information. The following tables state the color and significance of the warning, caution, and advisory annunciations which may appear on the G3X Touch display.

3.1 GENERAL (continued)

PFD Annunciations and Alerts (continued)

Warning Annunciations - Red

Annunciation	Pilot Action	Cause
AFCS	Manually fly the airplane.	Flight Director and Autopilot have failed
AP	Manually fly the airplane. Silence the autopilot disconnect tone and extingish the annunciation by touching the AP annunciation in the flight director mode bar.	Autopilot has failed or is inoperative
Red-X	Reference the data source or alternate equipment.	A Red-X through any display field indicates that display field is not receiving data or is corrupted
Red-X over yellow “AP”	Manually fly the airplane.	Autopilot Failure
PTRIM	Manually trim the airplane using the pitch trim wheel.	Electric pitch trim is inoperative (if installed and interfaced with the autopilot)

3.1 GENERAL (continued)

PFD Annunciations and Alerts (continued)

CAUTION Annunciations - Amber

Annunciation	Pilot Action	Cause
AHRS ALIGN	Fly aircraft manually and crosscheck attitude indication with standby attitude indicator and other sources of attitude information (airspeed, heading, altitude, etc.).	The AHRS monitors have detected a possible AHRS malfunction or an error with the attitude presentation. The AHRS is attempting to realign itself. The autopilot may automatically disconnect.
AHRS ALIGN-Keep Wings Level	Fly aircraft manually and crosscheck attitude indication with standby attitude indicator and other sources of attitude information. Limit aircraft attitude to ±10° bank and ±5° pitch as AHRS Aligns - OK to taxi.	Attitude and Heading Reference System is aligning. AHRS may not align with excessive pitch/bank angles.
AP	Manually fly the airplane.	Pilot has disconnected the autopilot.
HDG (amber background)	Use standby compass.	Displayed heading is outside of the internal accuracy limit.
MAX SPEED	Reduce power. Autopilot will raise aircraft nose to reduce airspeed.	Airspeed is approaching maximum autopilot operating speed.
MESSAGE (flashing)	Touch the flashing message annunciation to view a new system message.	A new system message has annunciated.
MIN SPEED	Add maximum available power and consider retracting the flaps. Autopilot will lower aircraft nose to increase airspeed.	Airspeed is approaching or below the minimum autopilot operating speed.
MSG	Touch “MSG” on external GPS navigator to review message content.	Various messages generated by the external GPS navigator.

3.1 GENERAL (continued)

PFD Annunciations and Alerts (continued)

CAUTION Annunciations - Amber (continued)

Annunciation	Pilot Action	Cause
REV and VFR	GPS navigation limited to VFR operations only.	External GPS navigator has failed. System has reverted to internal "VFR only" GPS.
SET LOC CRS	Set course pointer to the localizer front course for direct sensing on the G3X HSI.	The course pointer on the G3X is set to the back course. Note: regardless of course pointer setting, the lateral course deviation indicators (green diamonds) on G3X and G5 standby instrument will be reverse sensing.
TRAFFIC	Visually acquire the traffic to see and avoid.	The interfaced traffic system has determined that nearby traffic may be a threat to the aircraft.
↓TRIM DOWN↓	Move the pitch trim in the nose down direction until the annunciation extinguishes.	The autopilot is holding excessive force due to the aircraft being out of trim due to changes in airspeed or power.
↑TRIM UP↑	Move the pitch trim in the nose up direction until the annunciation extinguishes.	The autopilot is holding excessive force due to the aircraft being out of trim due to changes in airspeed or power.
"VFR" only	VOR/LOC/ILS navigation is unavailable and GPS navigation is limited to VFR operations only.	External GPS navigator is no longer providing VOR/LOC/ILS CDI information to the PFD and is providing inadequate CDI scaling for IFR operations to the PFD.

ADVISORY Annunciations - White

Annunciation	Pilot Action	Cause
PFT	Wait for preflight test to complete prior to using the autopilot.	The autopilot is performing its preflight test.

3.1 GENERAL (continued)

PFD Annunciations and Alerts (continued)

Aural Alerts

Aural alerts are provided to alert the crew and call for their attention:

- Warning - Single chime.
- Terrain cautions/warnings voice alerts.
- Traffic System voice alert.
- Stall Warning continuous tone.
- "Five-hundred" voice alert when aircraft descends within 500 feet above the terrain or runway threshold.
- "Minimums..Minimums" voice alert when the aircraft reaches MDA/DH set by the pilot.

If autopilot installed:

- Autopilot disconnect tone.
- "AIRSPEED..AIRSPEED" aural alert when airspeed is greater than maximum autopilot speed or less than minimum autopilot speed when the autopilot is engaged.
- "Engaging Autopilot" voice alert when the autopilot automatically engages in LVL mode.

Terminology

Many emergencies require some urgency in landing the aircraft. The degree of urgency varies with the emergency; therefore the terms "land as soon as possible" and "land as soon as practical" are employed. These terms are defined as follows:

Land as soon as possible - A landing should be accomplished at the nearest suitable airfield considering the severity of the emergency, weather conditions, field facilities, and ambient lighting.

Land as soon as practical - Emergency conditions are less urgent, and although the mission is to be terminated, the emergency is such that an immediate landing at the nearest suitable airfield may not be necessary.

3.3 AIRSPEEDS FOR SAFE OPERATION

Stall Speeds
- 2550 lbs (0° Flaps) ..... 50 KIAS
- 2550 lbs (Full Flaps) ..... 45 KIAS

Maximum Operating Maneuvering Speeds
- 2550 lbs ..... 113 KIAS
- 1917 lbs ..... 98 KIAS

Never Exceed Speed ..... 154 KIAS

Power Off Glide Speed
- 2550 lbs (0° Flaps) ..... 76 KIAS

3.5 EMERGENCY PROCEDURES CHECK LIST

3.5a Fire

Engine Fire During Start	
ENGINE START Switch	CONTINUE to CRANK ENGINE
MIXTURE	IDLE CUT-OFF
THROTTLE	OPEN
FUEL PUMP	OFF
FUEL Selector	OFF
Abandon aircraft if fire continues.	

Engine fires during start are usually the result of overpriming.

If a fire is present before the engine has started, move the mixture control to idle cut-off, open the throttle and continue to crank the engine. This is an attempt to draw the fire back into the engine.

If the engine has started, continue operating to try to pull the fire into the engine.

In either case, if fire continues more than a few seconds, move the fuel selector to OFF and mixture to idle cut-off and abandon the aircraft.

3.5 EMERGENCY PROCEDURES CHECK LIST (continued)

3.5a Fire (continued)

Engine Fire in Flight	
FUEL Selector	OFF
THROTTLE	CLOSED
MIXTURE	IDLE CUT-OFF
FUEL PUMP	OFF
HEAT/DEF (Defroster)	OFF
If fire persists:	
Airspeed	INCREASE in attempt to blow out fire
Proceed with POWER OFF LANDING procedure.	

The possibility of a fire in flight is extremely remote. It is essential that the source of the fire be promptly identified through character of the smoke, smell, heat in the cabin, instrument readings, or other indications since the action to be taken differs somewhat in each case.

Pilot judgment and a thorough understanding of the aircraft's systems are critical in determining what action to take during this emergency.

3.5 EMERGENCY PROCEDURES CHECK LIST (continued)

3.5a Fire (continued)

Electrical Fire In Flight	
BATTERY MASTER Switch	OFF
ALTR Switch	OFF
Vents	OPEN
HEAT/DEF (Defroster)	OFF
Fire	EXTINGUISH
Emergency Descent (If needed)	TO A SAFE ALTITUDE CONSISTENT WITH TERRAIN
Land as soon as possible.	

3.5 EMERGENCY PROCEDURES CHECK LIST (continued)

3.5b Engine Power Loss

Engine Power Loss During Takeoff

If sufficient runway remains for a complete stop:

Airspeed ..... MAINTAIN SAFE AIRSPEED
Landing .....LAND and STOP STRAIGHT AHEAD
Brakes.....AS REQUIRED

If insufficient runway remains:

Airspeed ..... MAINTAIN SAFE AIRSPEED
Flaps ..... AS REQUIRED

NOTE

Make only shallow turns to avoid obstructions.

If sufficient altitude has been gained to attempt a restart:

Airspeed ..... MAINTAIN 76 KIAS
FUEL Selector.....SWITCH to tank containing fuel
FUEL PUMP.....Check ON
MIXTURE.....RICH
ALT. AIR ..... OPEN

If power is not regained, proceed with power-off landing.

Proper action following a loss of power, depends on circumstances. If the situation allows, flaps are normally fully extended for touchdown. If power loss was caused by fuel exhaustion, power will not be regained after switching fuel tanks until the empty fuel lines are filled. This may require up to ten seconds.

3.5 EMERGENCY PROCEDURES CHECK LIST (continued)

3.5b Engine Power Loss (continued)

Engine Power Loss In Flight

Airspeed ..... MAINTAIN 76 KIAS
FUEL Selector..... SWITCH to tank containing fuel
FUEL PUMP..... ON
MIXTURE..... RICH
ALT. AIR ..... OPEN
LEFT/RIGHT MAG Switches..... Turn OFF then ON one at a time

When power is restored:

ALT. AIR ..... CLOSE
FUEL PUMP..... OFF

Land as soon as practical and investigate cause of power loss.

If power is not restored prepare for power-off landing.

Complete engine power loss is usually caused by fuel flow interruption, attempt to restore power by turning the fuel pump ON and selecting the other fuel tank. Move the throttle and mixture control levers to different settings. This may restore power if the problem is too rich or too lean a mixture or if there is a partial fuel system restriction. Water in the fuel could take some time to be consumed, so allowing the engine to windmill may restore power. If engine failure was caused by fuel exhaustion, power will not be restored after switching fuel tanks until the empty fuel lines are filled. This may require up to ten seconds. If power is still not restored, select ALT. AIR OPEN, and turn the left and right magneto switches OFF then ON one at a time.

3.5 EMERGENCY PROCEDURES CHECK LIST (continued)

3.5b Engine Power Loss (continued)

Power Off Landing

Airspeed ..... MAINTAIN 76 KIAS
Landing Pattern ..... ESTABLISH 1000 FT ABOVE FIELD AT DOWNWIND POSITION

When committed to landing:

Airspeed ..... 66 KIAS
Flaps ..... AS DESIRED
THROTTLE ..... CLOSE
MIXTURE ..... IDLE CUT-OFF
LEFT/RIGHT MAG Switches ..... OFF
ALTR Switch ..... OFF
FUEL PUMP ..... OFF
FUEL Selector ..... OFF
Seat belts and shoulder harnesses ..... TIGHTEN

After Touchdown:

BATTERY MASTER Switch ..... OFF

If power loss occurs at altitude, trim the aircraft for best gliding angle 76 KIAS, and look for a suitable field. If measures taken to restore power are not effective, and if time permits, check your charts for airports in the immediate vicinity. If possible, notify the FAA by radio of your difficulty and intentions. If another pilot or passenger is aboard, let them help. When you have located a suitable field, establish a spiral pattern around this field. Try to be at 1000 feet above the field at the downwind position, to make a normal landing approach. When the field can easily be reached, slow to 66 KIAS with flaps down for the shortest landing. Excess altitude may be lost by widening your pattern, using flaps, slipping, or a combination of these. Touchdown should normally be made at the lowest possible airspeed.

3.5 EMERGENCY PROCEDURES CHECK LIST (continued)

3.5c Engine Indicating System (EIS)

Oil Pressure

Indication: Single Chime, OIL PRESS Red Warning CAS Message, Flashing Red Oil Pressure Digital Indication

Low Oil Pressure:

THROTTLE ..... MINIMUM REQUIRED

If accompanied by high oil temperature, ***land as soon as possible****.*

If accompanied by normal oil temperature, ***land as soon as practical****.*

High Oil Pressure:

THROTTLE ..... MINIMUM REQUIRED

Land as soon as practical.

NOTE

If possible, always retain glide capability to the selected landing area in case of total engine failure.

Loss of oil pressure may be either partial or complete. A partial loss of oil pressure usually indicates a malfunction in the oil pressure regulating system, and a landing should be made as soon as possible to investigate and prevent engine damage.

A complete loss of oil pressure indication may signify oil exhaustion or may be the result of a faulty indication. In either case, proceed toward the nearest airport, and be prepared for a forced landing. If the problem is not an indication malfunction, the engine may stop suddenly. Maintain altitude until a power off landing can be accomplished. Don't change power settings unnecessarily, as this may hasten complete power loss. Depending on the circumstances, it may be advisable to make an off airport landing while power is still available, particularly if other indications of actual oil pressure loss, such as sudden increases in temperatures, or oil smoke, are apparent, and an airport is not close.

If engine stoppage occurs, proceed with Power Off Landing.

3.5 EMERGENCY PROCEDURES CHECK LIST (continued)

3.5c Engine Indicating System (EIS) (continued)

Oil Temperature

Indication: Single Chime, OIL TEMP Red Warning CAS Message, Flashing Red Oil Temperature Digital Indication

THROTTLE ..... MINIMUM REQUIRED
MIXTURE..... FULL RICH
Airspeed .....INCREASE if practical

***Land as soon as possible* and investigate the problem. Prepare for power off Landing.**

NOTE

If possible, always retain glide capability to the selected landing area in case of total engine failure.

An abnormally high oil temperature indication may be caused by a low oil level, an obstruction in the oil cooler, damaged or improper baffle seals, a faulty indication, or other causes. Land as soon as possible at an appropriate airport and have the cause investigated. Monitor the oil pressure gauge for an accompanying loss of pressure.

3.5 EMERGENCY PROCEDURES CHECK LIST (continued)

3.5c Engine Indicating System (EIS) (continued)

Cylinder Head Temperature

Indication: CHT TEMP **Amber Caution CAS Message, Yellow CHT Temperature Digital Indication**

ENGINE PAGE ..... SELECT
Cylinder Head Temperatures ..... MONITOR
THROTTLE ..... Consider REDUCING
MIXTURE ..... Consider ENRICHENING
Airspeed ..... Consider INCREASING

If cylinder head temperatures continue to rise:

Indication: Single Chime, CHT TEMP **Red Warning CAS Message, Flashing Red CHT Temperature Digital Indication**

THROTTLE ..... MINIMUM REQUIRED
MIXTURE ..... RICH
Airspeed ..... INCREASE if practical
Cylinder Head Temperatures ..... MONITOR

If cylinder head temperatures remain in the warning range:

Land as soon as possible. Prepare for a POWER OFF LANDING

3.5 EMERGENCY PROCEDURES CHECK LIST (continued)

3.5c Engine Indicating System (EIS) (continued)

Loss of Fuel Flow

CAUTION

If normal engine operation and fuel flow is not immediately re-established, or if the engine quits, the electric fuel pump should be turned off. The lack of fuel flow indication could indicate a leak in the fuel system, or fuel exhaustion. Land at the nearest suitable airport as soon as possible and have the cause investigated.

If caused by fuel depletion in one tank:

FUEL PUMP Switch.....ON
FUEL Selector.....SELECT OTHER TANK (FULLEST)
FUEL PUMP Switch..... OFF

If caused by engine driven fuel pump failure:

THROTTLE..... CLOSE
FUEL PUMP Switch .....ON
THROTTLE..... RE-ESTABLISH (as required)
MIXTURE..... SET AS REQUIRED

The most probable cause of loss of fuel flow is either fuel depletion in the fuel tank selected or failure of the engine driven fuel pump. If loss of fuel flow occurs, turn ON the electric fuel pump and check that the fuel selector is on a tank containing usable fuel. After power is regained, turn the electric fuel pump OFF.

If loss of fuel flow is due to failure of the engine driven fuel pump turn ON the electric fuel pump as it will supply sufficient fuel flow to run the engine.

3.5 EMERGENCY PROCEDURES CHECK LIST (continued)

3.5c Engine Indicating System (EIS) (continued)

Fuel Quantity Low
Indication: Single Chime, Flashing Red Fuel Quantity Digital Indication. **WARNING** **Avoid unusual attitudes such as prolonged slips towards the low quantity tank as this will decrease the time remaining prior to fuel starvation.** **If one tank has low fuel quantity:** FUEL Selector.....ON FULLEST TANK ***Land as soon as practical.*** **If both tanks have low fuel quantity:** FUEL Selector..... ALTERNATE TANKS TO MAINTAIN FUEL SUPPLY TO ENGINE ***Land as soon as possible.***

3.5 EMERGENCY PROCEDURES CHECK LIST (continued)

3.5d Electrical Failures

NOTE

The pilot should only reset a tripped circuit breaker if the system/component is considered essential for safety of flight. Prior to resetting the circuit breaker, wait at least one minute and verify there is no smoke or burning smell. If the circuit breaker opens a second time, leave the circuit breaker out. Have a maintenance inspection performed prior to resetting the circuit breaker. Do not reset any non-essential circuit breakers in flight.

Alternator Failure

Indication: Single Chime, ALTR FAIL Red Warning CAS Message

CAUTION

The ALTR circuit breaker should not be opened manually when the alternator is functioning properly.

Verify Failure ..... CHECK ALT AMPS Indication
ALTR Switch ..... OFF
ALTR Circuit Breaker (Row 1, Col. 13) ..... RESET if Tripped
ALTR FIELD Circuit Breaker (Row 1, Col. 12) ..... RESET
ALTR Switch ..... ON

If alternator still failed:

CAUTION

The stall warning system will be inoperative if battery power is depleted.

ALTR Switch ..... OFF
Electrical Power Remaining ..... 30 minutes
Electrical Load ..... SHED in less than 3 minutes

3.5 EMERGENCY PROCEDURES CHECK LIST (continued)

3.5d Electrical Failures (continued)

Alternator Failure (continued)

To ensure 30-minutes of battery life:

VENT FAN ..... OFF
Battery Discharge ..... -15 Amps Maximum
Pitot Heat ..... 14 Minutes Usage Maximum
Com Radio Transmit ..... 3 Mins Usage Maximum
Fuel Pump ..... 2 Mins Usage Maximum
Landing Light ..... 2 Mins Usage Maximum

Land as soon as possible.

NOTE

The 30 minutes of battery life can be extended by deactivating any of the following: USB ports, avionics and panel lighting, strobe lights, nav lights, or the autopilot.

Turning the ALTR switch OFF, reseting the ALTR FIELD circuit breaker and then turning the ALTR back ON, will reset the overvoltage relay. If the trouble was caused by a momentary overvoltage condition (30.5 volts or higher) this procedure should return the ammeter to a normal reading.

If alternator does not reset, the aircraft battery will become the primary source of electrical power. If the aircraft battery power is depleted, the G5 standby indicator will revert to it's internal battery allowing approximately four hours of additional operation. The G5 standby heading will be inoperative requiring the pilot to use the non-stabilized magnetic compass.

3.5 EMERGENCY PROCEDURES CHECK LIST (continued)

3.5d Electrical Failures (continued)

Complete Electrical Failure

Indication: PFD, MFD and all equipment, except the G5 standby instrument, will be unpowered.

WARNING

All aural alerts, including stall warning, become inoperative during a complete electrical failure. Maintain additional airspeed awareness during low and high speed flight.

Standby Instrument ..... Verify OPERATIONAL
Aircraft Control..... Use Standby Instrument
Airspeed ..... Do Not Exceed 110 KIAS

Exit and avoid IFR conditions.

Land as soon as practical.

NOTE

The following equipment/features will be inoperative:

- PFD
- MFD
- Com 1 and Com 2
- GPS and VHF Navigation
- Transponder

NOTE

Airspeed is maintained at 110 KIAS or less to keep RPM within limits.

After engine shutdown:

Standby Instrument ..... OFF (PWR button – Press and Hold for 5-Seconds)

3.5 EMERGENCY PROCEDURES CHECK LIST (continued)

THIS PAGE INTENTIONALLY LEFT BLANK

3.5 EMERGENCY PROCEDURES CHECK LIST (continued)

3.5e Avionics System Failures

PFD Failure

Indication: PFD display goes blank.

WARNING

All aural alerts, except stall warning, become inoperative when the PFD fails. Maintain additional airspeed awareness during low and high speed flight.

Standby Instrument ..... Verify OPERATIONAL
Aircraft Control ..... Use Standby Instrument
Airspeed ..... Do Not Exceed 110 KIAS
COM1 (external com) ..... TUNE as necessary
Navigation ..... Use G5 Display with GPS1 (external GPS) or Nav 2 (VOR/LOC/ILS) source information

Exit and avoid IFR conditions as soon as practical.

3.5 EMERGENCY PROCEDURES CHECK LIST (continued)

3.5e Avionics System Failures (continued)

PFD Failure (continued)

NOTE

The lateral/vertical course deviation indicator on the G5 Standby Instrument will display GPS1, or VOR/LOC/ILS course deviation information depending on the source selected. The autopilot will initially disconnect with no disconnect tone, however, it may be reengaged using the fully functional G5 Standby Instrument.

NOTE

The following features will be inoperative:
- Engine Indication System
- CAS Messages and System Messages
- Com 2
- Intercom for aft seat passenger

NOTE

Airspeed is maintained at 110 KIAS or less to keep RPM within limits.

3.5 EMERGENCY PROCEDURES CHECK LIST (continued)

3.5e Avionics System Failures (continued)

ADAHRS Failures

Indication: AHRS FAIL and ADC FAIL **Amber Caution CAS Messages, Red-X over G3X and G5 standby heading indicators.**

Aircraft Control.....Use Standby Instrument
Navigation.....Use TRK Mode (external GPS), Nav 2 (VOR/LOC/ILS), or magnetic compass
ADAHRS Circuit Breaker (Row 1, Col. 3).....RESET

If ADAHRS data still invalid:

Exit and avoid IFR conditions as soon as practical.

CAUTION

Amber CAS messages ATT MISCOMP, IAS MISCOMP, or ALT MISCOMP indicate a miscomparison of that AHRS parameter. The pilot must crosscheck the affected indications with other source to determine which are correct. NO COMP advisory CAS messages indicate a failure of that parameter within the ADAHRS.

NOTE

The autopilot will automatically disconnect without a disconnect tone, but can be reengaged using the G5 standby indicator as its source of air data, attitude, and nav information. The autopilot may be re-engaged in TRK mode to fly a GPS track (instead of heading) or to NAV mode to fly GPS/VOR/LOC courses related to the selected navigation source. In either case, the course pointer will always point north and the CDI will continue to represent accurate course deviations.

3.5 EMERGENCY PROCEDURES CHECK LIST (continued)

3.5e Avionics System Failures (continued)

ADAHRS Failures (continued)

NOTE

The following features will be inoperative:
- OAT
- TAS (True Airspeed)
- Heading

NOTE

For partial ADAHRS failures, a Red-X and amber text will appear over the affected parameter(s).

NOTE

G3X will display a Red-X over the XPDR window indicating the ability to remotely control the GNX 375 transponder through the G3X has failed. The GNX 375 transponder functions can be operated directly through the GNX 375.

After a brief delay, the G3X will display attitude, altitude, and airspeed information from the G5 standby instrument as indicated by AHRS REVERT and ADC REVERT amber CAS messages. The G3X and G5 standby heading will be inoperative requiring the pilot to use the non-stabilized magnetic compass or other information for course guidance. See Section 3.1 for additional information concerning PFD alerts.

3.5 EMERGENCY PROCEDURES CHECK LIST (continued)

3.5e Avionics System Failures (continued)

ADAHRS Degraded Modes

Indication: Amber AHRS ALIGN annunciation on PFD

Aircraft Control.....Use Standby Instrument

NOTE

This annunciation indicates that the AHRS is beginning to fail and the internal sensors are trying to realign themselves. The attitude presentation behind the annunciation is still valid but should be cross-checked using the standby instruments.

Exit and avoid IFR conditions as soon as practical.

Indication: In flight, Amber ALIGNING KEEP WINGS LEVEL annunciation on PFD

G3X has detected an invalid attitude solution and will not display any attitude information.

Aircraft Control.....Use Standby Instrument
Aircraft Attitude.....limit to ±10° bank, ±5° pitch

If attitude display does not return, continue using Standby Instrument.

Exit and avoid IFR conditions as soon as practical.

3.5 EMERGENCY PROCEDURES CHECK LIST (continued)

3.5e Avionics System Failures (continued)

Erroneous or Loss of Engine and Fuel Displays

Indication: EIS FAIL **Amber Caution CAS Message, or Unresponsive engine/fuel indications, or Red-X over affected engine parameter or fuel display.**

NOTE

Erroneous indications may be determined by comparing a display with other system information.

1. If RPM is not available, limit airspeed to 110 KIAS to maintain RPM within limits.
2. Monitor other indications to determine the health of the engine.
3. Use known power settings from POH power setting tables for approximate fuel flow values.
4. Use other system information, such as annunciator messages, fuel totalizer quantity and flow, to safely complete the flight.

If indications for any of the following are invalid:

- All Engine Parameters
- VOLTS
- ALT AMPS
- BATT AMPS
- FUEL QTY
- FUEL FLOW
- CHT
- EGT

ENGINE SENSOR circuit breaker (Row 1, Col. 2).....RESET

If all engine and fuel display parameters are still unavailable, *land as soon as practical.*

3.5 EMERGENCY PROCEDURES CHECK LIST (continued)

3.5e Avionics System Failures (continued)

COM Failure

Indication: Inability to communicate/receive on COM1 and COM2.

Try using another headset.

If that fails:.
AUDIO CONTROL circuit breaker (Row 1, Col. 8) .....PULL

NOTE

If power is lost to the audio panel, a fail-safe communications path becomes available between the pilot's headset/microphone and COM1.

If that fails:.
Plug headset into copilot mike/phone jacks and use the copilot side push to talk.

If still unable to make radio contact:.
TRANSPONDER..... SQUAWK 7600
Exit and avoid IFR conditions as soon as practical.

3.5 EMERGENCY PROCEDURES CHECK LIST (continued)

3.5e Avionics System Failures (continued)

Loss of Navigation Data (GPS/VOR/LOC/GS)

Indication: Loss of navigation data (CDI, glideslope/glidepath, bearing pointer)

Navigation.....Use alternate source of navigation (ILS, LOC, VOR, GPS (External))

If no alternate navigation sources are available and an amber "REV and VFR" or "VFR" only is displayed on the HSI:

Navigation..... Use the CDI for course information only as needed to exit IFR conditions. (G3X is using Internal GPS)

NOTE

In the event that the external GPS (GNX 375) fails, the G3X reverts to its internal VFR GPS for navigation and flight plan modifications. If Internal GPS (G3X) is used for navigation, aircraft is limited to VFR conditions.

NOTE

If an amber VFR is displayed by itself on the HSI, there will be no VOR/LOC/ILS CDI course guidance along with inadequate GPS CDI scaling on the PFD. GPS navigation is limited to VFR conditions.

Exit and avoid IFR conditions as soon as practical.

3.5 EMERGENCY PROCEDURES CHECK LIST (continued)

3.5e Avionics System Failures (continued)

Autopilot or ESP Malfunctions

Indication: An unexpected roll or pitch deviation from the desired flight path while using autopilot or flight director commands.

WARNING

Do not press the LVL switch if an autopilot or pitch trim malfunction is suspected.

WARNING

While in flight, do not overpower the autopilot. The trim will operate in the direction opposing the overpower force, which will result in large out-of-trim forces.

Do not attempt to re-engage the autopilot or use manual electric pitch trim until the cause of the malfunction has been corrected.

NOTE

Electronic Stability Protection (ESP) will be inoperative following an autopilot failure.

Control Wheel .....GRASP FIRMLY
A/P DISC Button .....DEPRESS and HOLD
(Be prepared for high control forces)
Attitude Indicators.....CROSSCHECK, MAINTAIN/ REGAIN AIRCRAFT CONTROL

NOTE

Do not release the A/P DISC Button until after pulling the AUTOPILOT Circuit Breaker.

Pitch Trim .....RETRIM as necessary
AUTOPILOT Circuit Breaker (Row 2, Col. 1).....PULL
Autopilot .....DO NOT RE-ENGAGE

3.5 EMERGENCY PROCEDURES CHECK LIST (continued)

3.5e Avionics System Failures (continued)

Automatic Autopilot Disconnect

Indication: Red A/P on PFD and continuous aural disconnect tone

A/P DISC Button ..... PRESS and RELEASE
Aircraft Attitude..... MAINTAIN/ REGAIN AIRCRAFT CONTROL
Pitch Trim .....RETRIM as necessary
A/P Annunciation on G3X Autopilot Status Bar..... TOUCH (cancels disconnect tone)

NOTE

The autopilot disconnect may be accompanied by a red AFCS in the autopilot status box, indicating the automatic flight control system has failed. The flight director will not be available and the autopilot cannot be re-engaged with this annunciation present.

If the disconnect is accompanied by an amber AP with a Red-X, the autopilot will not be available however the flight director will still be functional.

3.5 EMERGENCY PROCEDURES CHECK LIST (continued)

3.5e Avionics System Failures (continued)

Electric PitchTrim Failure

Indication: Red PTRIM on PFD

NOTE

Loss of the electric pitch trim servo will not cause the autopilot to disconnect. Monitor pitch attitude for unusual behavior. Be alert to possible autopilot out-of-trim conditions (see AUTOPILOT OUT OF TRIM procedure this section) and expect residual control forces upon disconnect.

Control Wheel ..... GRASP FIRMLY
A/P DISC Button ..... PRESS and RELEASE
(Be prepared for high elevator control forces)
Pitch Trim ..... AS REQUIRED USING PITCH TRIM WHEEL

NOTE

The autopilot may be re-engaged. Pilot must monitor PFD for amber TRIM UP or TRIM DOWN annunciations and manually trim aircraft until annunciation extinguishes.

3.5 EMERGENCY PROCEDURES CHECK LIST (continued)

3.5e Avionics System Failures (continued)

Electric Pitch Trim Runaway

Indication: An unexpected pitch deviation from the desired flight path and red PTRIM annunciation

WARNING

In flight, do not overpower the autopilot. The trim will operate in the direction opposing the overpower force, which will result in large out-of-trim forces.

Control Wheel .....GRASP FIRMLY
A/P DISC Button .....DEPRESS and HOLD
(Be prepared for high control forces)
Attitude Indicators.....CROSSCHECK, MAINTAIN/ REGAIN AIRCRAFT CONTROL

NOTE

Do not release the A/P DISC Button until after pulling the PITCH TRIM Circuit Breaker.

PITCH TRIM Circuit Breaker (Row 2, Col. 2).....PULL
Pitch Trim .....RETRIM MANUALLY

NOTE

The autopilot may be re-engaged with electric pitch trim system disabled. Pilot must monitor PFD for amber TRIM UP or TRIM DOWN annunciations and manually trim aircraft until annunciation extinguishes.

3.5 EMERGENCY PROCEDURES CHECK LIST (continued)

3.5e Avionics System Failures (continued)

ESP Activation

Power..... AS REQUIRED
Aircraft Attitude and Airspeed ..... MAINTAIN/ REGAIN AIRCRAFT CONTROL

NOTE

If ESP is active for approximately 10 seconds out of a 20 second interval, the autopilot will automatically engage in LVL mode, an aural 'ENGAGING AUTOPILOT' will be played and the autopilot will roll the wings level and fly at zero-vertical speed. ESP can be disabled by pressing and holding the A/P DISC / TRIM INT button. Releasing the button will allow ESP to function.

3.5 EMERGENCY PROCEDURES CHECK LIST (continued)

3.5e Avionics System Failures (continued)

Autopilot Overspeed Recovery

Indication: Amber MAX SPEED annunciation on the PFD and AIRSPEED..AIRSPEED aural alert

This autopilot mode is active whenever the aircraft actual or projected airspeed exceeds the maximum approved autopilot operating speed of 140 KIAS.

THROTTLE.....REDUCE POWER as required
Aircraft Attitude and Altitude.....MONITOR

After overspeed condition is corrected:

Autopilot ..... DISCONNECT or RESELECT VERTICAL AND LATERAL MODES (if necessary)
Power.....ADJUST as necessary

NOTE

Autopilot Overspeed Protection Mode provides a pitch up command to maintain 140 KIAS. Overspeed recovery is not active in altitude hold (ALT), glideslope (GS) or glidepath (GP) modes. The speed reference cannot be adjusted while in overspeed recovery mode.

NOTE

The autopilot disconnect tone will not be heard if the higher priority “AIRSPEED..AIRSPEED” aural alert finishes later than the disconnect tone. Visual annunciations for autopilot disconnect are always displayed.

3.5e Avionics System Failures (continued)

Autopilot Underspeed Recovery

Indication: Amber MIN SPEED annunciation on the PFD, AIRSPEED..AIRSPEED aural alert, and possible stall warning tone

This autopilot mode is active whenever the autopilot is engaged and the airspeed has decreased below the minimum autopilot operating speed.

THROTTLE ..... INCREASE POWER as required
Aircraft Attitude and Altitude..... MONITOR
Flaps Position.....CONSIDER

After underspeed condition is corrected:

Autopilot ..... RESELECT VERTICAL AND LATERAL MODES (if necessary)
Power.....ADJUST as necessary

NOTE

Autopilot Underspeed Protection Mode provides a pitch down command to maintain 65 KIAS.

3.5e Avionics System Failures (continued)

Autopilot Out-Of-Trim

Indication: Amber TRIM UP or TRIM DOWN annunciation on the PFD

WARNING

Do not attempt to overpower the autopilot in the event of a mistrim. The autopilot servos will oppose pilot input and will trim opposite the direction of pilot input (pitch axis only). This could lead to a significant out-of-trim condition resulting in large control wheel force when disengaging the autopilot.

NOTE

Momentary display of the TRIM UP or TRIM DOWN annunciations during configuration changes or large airspeed changes is normal.

Control Wheel .....GRASP FIRMLY with both hands

WARNING

Be prepared for significant sustained control forces in the direction of the mistrim annunciation. For example, TRIM DOWN indicates nose down control wheel force will be required upon autopilot disconnect.

A/P DISC Button .....DEPRESS
PITCH TRIM Circuit Breaker (Row 2, Col. 2).....PULL
Pitch Trim .....RETRIM MANUALLY
Autopilot .....RE-ENGAGE if available

NOTE

Electric pitch trim should be considered inoperative until the cause of the mistrim has been investigated and corrected.
The pilot may re-engage the autopilot but will be required to monitor the PFD for amber TRIM UP or TRIM DOWN annunciations and manually trim aircraft until annunciation extinguishes.

3.5e Avionics System Failures (continued)

Abnormal Flight Director Mode Transitions

Indication: Abnormal lateral or vertical mode transitions will flash in amber text for 10 seconds.

NOTE

Upon loss of a selected mode, the system will revert to the default mode for the affected axis, either ROL or PIT.

Loss of selected vertical mode

Autopilot Mode Controls ..... SELECT ANOTHER VERTICAL MODE

If on an instrument approach:
Autopilot .....DISCONNECT (if coupled) and continue manually or execute missed approach

Loss of selected lateral mode

Autopilot Mode Controls .....SELECT ANOTHER LATERAL MODE

If on an instrument approach:
Autopilot .....DISCONNECT (if coupled) and continue manually or execute missed approach

3.5e Avionics System Failures (continued)

Autopilot Preflight Test Failure

Indication: Amber AP with a Red-X in autopilot status box

NOTE

Indicates the AFCS system failed the automatic Pre-Flight test. The autopilot, ESP, and electric pitch trim are inoperative.

AUTOPILOT Circuit Breaker (Row 2, Col. 1) ..... PULL
PITCH TRIM Circuit Breaker (Row 2, Col. 2) ..... PULL
AUTOPILOT and PITCH TRIM Circuit Breakers ..... RESET simultaneously

NOTE

One attempt at resetting the circuit breakers is allowed.

3.5e Avionics System Failures (continued)

Autopilot - Loss Of Navigation Information

Indication: Amber GPS, VOR, LOC, or BC flashes for 10 seconds

NOTE

If a navigation signal is lost while the autopilot is tracking it, the autopilot will roll the aircraft wings level and default to roll mode (ROL).

Autopilot Control Panel ..... SELECT HDG mode and SET desired heading
NAV Source ..... SELECT a valid NAV source
NAV Key ..... PRESS

If on an instrument approach at the time the navigation signal is lost:

NOTE

Being in a VOR cone of confusion for more than 10 seconds may cause CDI to become temporarily unusable and the autopilot to default to ROL mode.

Missed Approach Procedure ..... CONSIDER EXECUTING

3.5e Avionics System Failures (continued)

Autopilot - Loss Of Airspeed Data

Indication: Red-X through airspeed tape on G3X display, amber AP with a Red-X in autopilot status box.

NOTE

If airspeed data is lost while the autopilot is tracking airspeed, the flight director will default to pitch mode (PIT).

A/P DISC / TRIM INT Button .....PRESS AND RELEASE
Aircraft Attitude..... MAINTAIN / REGAIN AIRCRAFT CONTROL
Manual Pitch Trim .....TRIM as required
AP Annunciation on G3X Autopilot Status Bar.....TOUCH (to cancel disconnect tone)

NOTE

The autopilot cannot be re-engaged. The flight director is available however IAS mode cannot be selected. Loss of airspeed will be accompanied by a red PTRIM indication on the G5 or G3X.

3.5e Avionics System Failures (continued)

Autopilot - Loss Of Altitude Data

Indication: Red-X through altitude tape on G3X display

NOTE

If altitude data is lost while the autopilot is tracking altitude, the autopilot will default to pitch mode (PIT).

Autopilot ..... SELECT different vertical mode

Autopilot - Loss Of GPS Information

NOTE

If GPS position data is lost while the autopilot is tracking a GPS course, the autopilot will default to roll mode (ROL).

Autopilot ..... SELECT different lateral and vertical mode (as necessary)

If on a GPS instrument approach:

A/P DISC / TRIM INT Button ..... PRESS, Continue the approach manually

Or

Missed Approach Procedure .....EXECUTE

3.5f Pitot Heat Failure

Pitot Heat Failure
Indication: P HEAT FAIL
PITOT HEAT Switch ..... OFF
PITOT HEAT Circuit Breaker (Row 2, Col. 8) .....RESET
PITOT HEAT Switch .....ON
If Pitot Heat still inoperative:
Exit and avoid IFR conditions.

3.5g Starter Engaged

Starter Engaged
Indication: Single Chime, START ENGAGE Red Warning CAS Message,
If on the ground:
THROTTLE.....REDUCE
ENGINE START Circuit Breaker (Row 1, Col. 11).....PULL
ENGINE.....SHUTDOWN
If in flight:
THROTTLE.....REDUCE
ENGINE START Circuit Breaker (Row 1, Col. 11).....PULL
Land as soon as possible.

3.5h Spin Recovery

Spin Recovery	
Rudder	FULL OPPOSITE TO DIRECTION OF ROTATION
Control wheel	FULL FORWARD while NEUTRALIZING AILERONS
THROTTLE	IDLE
Rudder	NEUTRAL (when rotation stops)
Control wheel	SMOOTH BACK PRESSURE to recover from dive

Intentional spins are prohibited in this airplane.

3.5i Open Door

Open Door	
To close the door in flight:	
Airspeed	REDUCE to less than 87 KIAS
Cabin vents	CLOSE
Upper latch (if open)	CLOSE Latch
Side latch (if open)	PULL on Armrest While Closing Latch
If Both Latches Open	CLOSE Side Then Top Latch

If both upper and side latches are open, the door will trail slightly open and airspeeds will be reduced slightly.

3.5j Engine Roughness

Engine Roughness
ALT. AIR ..... OPEN
If roughness continues after one minute:
MIXTURE..... Adjust for Maximum Smoothness ALT. AIR ..... CLOSE FUEL PUMP ..... ON Fuel Selector ..... SWITCH TANKS Engine Indicators ..... .CHECK LEFT/RIGHT MAG Switches ..... Individually Select OFF and ON
If operation is satisfactory on either MAG, continue on that magneto at reduced power and full RICH mixture to nearest airport.
Prepare for power-off landing.
NOTE If possible, always retain glide capability to the selected landing area in case of total engine failure.

Engine roughness may be caused by blockage in the injector nozzles, induction system icing, or ignition problems.

Adjust the mixture for maximum smoothness. The engine will run rough if the mixture is too rich or too lean. Move the ALT. AIR to OPEN and then turn ON the electric fuel pump. Switch the fuel selector to another tank to see if fuel contamination is the problem.

Check the engine gauges for abnormal readings. If any gauge readings are abnormal proceed accordingly.

THIS PAGE INTENTIONALLY LEFT BLANK

TABLE OF CONTENTS
SECTION 4
NORMAL PROCEDURES

Paragraph No.		Page No.
4.1	General	4-1
4.3	Airspeeds for Safe Operations	4-2
4.5	Normal Procedures Checklist	4-2
4.5a	Preflight Checklist	4-2
4.5b	Engine Start - General	4-8
4.5c	Before Starting Engine	4-9
4.5d	Engine Start Checklists	4-10
	Normal Start - Cold Engine	4-10
	Normal Start - Hot Engine	4-11
	Engine Start - Flooded	4-11
	Engine Start Using External Power Source	4-12
4.5e	Before Taxiing Checklist	4-13
	Warm-Up	4-13
	Before Taxiing	4-13
4.5f	Taxiing Checklist	4-14
4.5g	Ground Checklist	4-15
4.5h	Before Takeoff Checklist	4-16
4.5i	Takeoff Checklist	4-17
	Takeoff	4-17
	Short Field, Obstacle Clearance	4-17
4.5j	Climb Checklist	4-18
4.5k	Cruising Checklist	4-18
4.5l	Descent Checklist	4-19
4.5m	Approach and Landing Checklist	4-20
4.5n	Go-Around Checklist	4-22
4.5o	After Landing Checklist	4-23
4.5p	Stopping Engine Checklist	4-24
4.5q	Mooring Checklist	4-24
4.7	Stalls	4-25
4.9	Turbulent Air Operation	4-25
4.11	Noise Level	4-26
4.13	Recommended Procedures for Elimination of Fuel Vapor	4-26

THIS PAGE INTENTIONALLY LEFT BLANK

SECTION 4

NORMAL PROCEDURES

4.1 GENERAL

This section describes the recommended procedures for conducting normal operations for the Piper Pilot. All of the required (FAA regulations) procedures necessary for operation of the airplane are presented.

This section provides checklists for all normal operating procedures, using a simple action - reaction format, with little emphasis on system operation.

These checklists should be used during normal ground and flight operations. When appropriate, additional information is provided immediately below the checklist, providing more detailed information related to that procedure. In order to operate the airplane in a safe and efficient manner, pilots should familiarize themselves with both the checklist and amplified procedures.

Normal procedures associated with those optional systems and equipment which require handbook supplements are provided by Section 9 Supplements.

4.3 AIRSPEEDS FOR SAFE OPERATIONS

The following airspeeds are significant to the safe operation of the airplane. They are for standard airplanes flown at gross weight under standard conditions at sea level.

Performance for specific airplanes may vary from published figures depending upon the equipment installed, the condition of the engine, airplane and equipment, atmospheric conditions and piloting technique.

(a)	Best Rate of Climb Speed	76 KIAS
(b)	Best Angle of Climb Speed	64 KIAS
(c)	Maximum Operating Maneuvering Speed Vo	113 KIAS (at 2550 lbs.) See Airspeed Limitations, Section 2.3
(d)	Maximum Flap Speed	102 KIAS
(e)	Landing Final Approach Speed (Flaps 40)	66 KIAS
(f)	Maximum Demonstrated Crosswind Velocity	17 KTS

4.5 NORMAL PROCEDURES CHECKLIST

4.5a Preflight Checklists

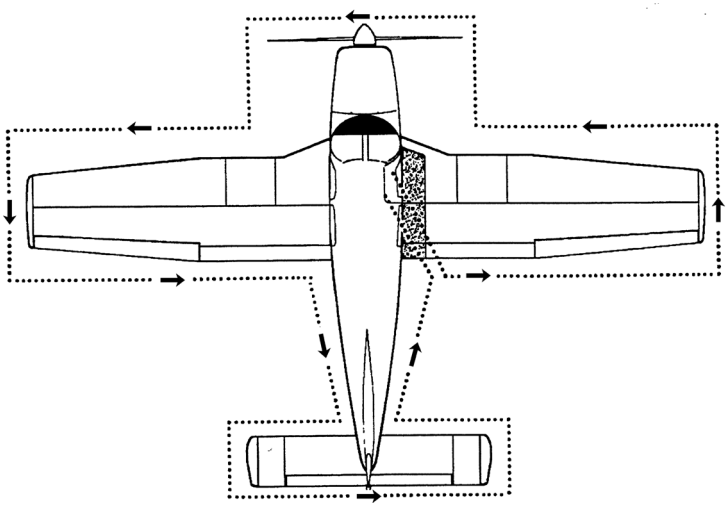

WALK-AROUND
Figure 4-1

4.5 NORMAL PROCEDURES CHECKLIST (continued)

4.5a Preflight Checklists (continued)

CAUTION

The flap position should be noted before boarding the airplane. The flaps must be placed in the UP position before they will lock and support weight on the step.

NOTE

Normal gear strut extension (exposed area) corresponds to that for the airplane under a normal static load (empty weight of the airplane plus full fuel and oil).

COCKPIT

Control Wheel ..... RELEASE RESTRAINTS
PARK BRAKE ..... SET
All Instrument Panel Switches ..... OFF
MIXTURE ..... IDLE CUT-OFF
LEFT/RIGHT MAG Switches ..... OFF
BATTERY MASTER Switch ..... ON
Panel Lighting (Night Flight) ..... VERIFY OPERATION
PITOT HEAT Switch ..... ON
P HEAT OFF CAS Message ..... EXTINGUISHED

4.5a Preflight Checklists (continued)

COCKPIT (continued)

FUEL ..... CHECK QUANTITY & IMBALANCE
Exterior Lighting Switches ..... ON
Exterior Lighting ..... VERIFY OPERATION

CAUTION

Care should be taken when checking the heated pitot head. The unit becomes very hot. Ground operation should be limited to three minutes to avoid damaging the heater elements.

Pitot/Static Head ..... CHECK - WARM
Stall Warning Tone ..... CHECK
All Lighting Switches ..... OFF
PITOT HEAT Switch ..... OFF
P HEAT OFF CAS Message ..... ILLUMINATED
BATTERY MASTER Switch ..... OFF
Flaps ..... EXTEND
Primary Flight Controls ..... PROPER OPERATION
Stabilator and Rudder Trim ..... NEUTRAL
Pitot and Static Systems ..... DRAIN
Windows ..... CHECK CLEAN
Required Papers and POH ..... VERIFY ON BOARD
Weight and Balance ..... VERIFY
Tow Bar ..... STOW PROPERLY & SECURE

4.5a Preflight Checklists (continued)

RIGHT WING

Surface Condition ..... CLEAR OF ICE, FROST, SNOW
Flap and Hinges .....NO DAMAGE or INTERFERENCE
Aileron and Hinges ..... NO DAMAGE or INTERFERENCE
Static Wicks .....CHECK SECURE
Wing Tip and Lights ..... CHECK
Fuel Tank .....CHECK SUPPLY VISUALLY and SECURE CAP
Fuel Tank Vent .....CLEAR

CAUTION

When draining any amount of fuel, care should be taken to ensure that no fire hazard exists before starting engine.

Fuel Tank Sumps .....DRAIN AND CHECK FOR WATER, SEDIMENT, AND PROPER FUEL
Tie Down and Chock .....REMOVE
Main Gear Strut..... PROPER INFLATION (4.5 ± .25 in.)
Tire ..... CHECK
Brake block and disc..... CHECK
Fresh Air Inlet .....CLEAR

NOSE SECTION

General Condition ..... CHECK
Cowling ..... SECURE
Windshield ..... CLEAN
Oil ..... CHECK QUANTITY
Dipstick .....PROPERLY SEATED and SECURE
Oil Filler Door..... SECURE
Propeller and Spinner..... CHECK
Air Inlets .....CLEAR

4.5a Preflight Checklists (continued)

NOSE SECTION (continued)

Chock ..... REMOVE
Nose Gear Strut ..... PROPER INFLATION (3.25 ± .25 in.)
Tire ..... CHECK

CAUTION

When draining any amount of fuel, care should be taken to ensure that no fire hazard exists before starting engine.

Fuel Strainer ..... DRAIN

Check the general condition of the nose section; look for oil or fluid leakage and that the cowling is secure. The propeller and spinner should be checked for detrimental nicks, cracks, or other defects. Check the tire for cuts, wear, and proper inflation.

LEFT WING

Surface Condition ..... CLEAR OF ICE, FROST, SNOW
Fresh Air Inlet ..... CLEAR
Main Gear Strut ..... PROPER INFLATION (4.5 ± .25 in.)
Tire ..... CHECK
Brake Block and Disc ..... CHECK

CAUTION

When draining any amount of fuel, care should be taken to ensure that no fire hazard exists before starting engine.

Fuel Tank Sump ..... DRAIN AND CHECK FOR WATER, SEDIMENT, AND PROPER FUEL
Fuel Tank Vent ..... CLEAR

4.5a Preflight Checklists (continued)

LEFT WING (continued)

Tie Down and Chock ..... REMOVE
Fuel Tank ..... CHECK SUPPLY VISUALLY and SECURE CAP
Pitot/Static Head ..... REMOVE COVER - HOLES CLEAR
OAT Probe ..... CHECK
Wing Tip and Lights ..... CHECK
Aileron and Hinges ..... NO DAMAGE or INTERFERENCE
Flap and Hinges ..... NO DAMAGE or INTERFERENCE
Static Wicks ..... CHECK SECURE

FUSELAGE

Antennas ..... CHECK
Empennage ..... CLEAR OF ICE, FROST, SNOW
Stabilator and Trim Tab ..... NO DAMAGE or INTERFERENCE
Rudder ..... NO DAMAGE or INTERFERENCE
Static Wicks ..... CHECK SECURE
Tie Down ..... REMOVE

4.5b Engine Start

ENGINE START - GENERAL

WARNING

If the START ENGAGE CAS message remains illuminated after the ENGINE START button is released and the engine is running, stop the engine and determine the cause.

CAUTION

Do not attempt flight if there is no indication of alternator output.

CAUTION

If a positive oil pressure is not indicated within 30 seconds following an engine start, stop the engine and determine the trouble. In cold weather it will take a few seconds longer to get a positive oil pressure indication.

NOTE

If engine does not start within 10 seconds, prime and repeat starting procedure. Starter manufacturer recommends starter cranking periods be limited to 10 seconds with a 2 minute rest period between cranking periods. Maximum of 5 start periods allowed. If start is not achieved on fifth attempt allow starter to cool for 30 minutes before attempting additional starts.

4.5c Before Starting Engine Checklists

BEFORE STARTING ENGINE

Flaps .....RETRACT
Door.....CLOSED and SECURE
Seats .....ADJUSTED and LOCKED IN POSITION
Seat Belts and Harness.....FASTEN/ADJUST
CHECK INERTIA REEL
FUEL Selector .....DESIRED TANK
PARK BRAKE .....SET
Circuit Breakers .....CHECK IN
ALT. AIR .....CLOSE
ALTERNATE STATIC SOURCE ..... OFF
All Electrical Switches..... OFF
BATTERY MASTER Switch..... OFF

4.5d Engine Start Checklists

NORMAL START - COLD ENGINE

THROTTLE .....1/2 IN. OPEN
BATTERY MASTER Switch.....ON
ALTR Switch .....ON
LEFT/RIGHT MAG Switches.....ON
FUEL PUMP Switch.....ON
STROBE LIGHTS Switch.....ON
MIXTURE.....PRIME - then IDLE CUT-OFF
PFD Annunciations ..... CONSIDER
Propeller .....CLEAR
ENGINE START Switch..... ENGAGE
MIXTURE..... ADVANCE
THROTTLE .....ADJUST
Oil Pressure ..... CHECK

4.5d Engine Start Checklists (continued)

NORMAL START - HOT ENGINE

THROTTLE ..... 1/2 IN. OPEN
BATTERY MASTER Switch ..... ON
ALTR Switch ..... ON
LEFT/RIGHT MAG Switches ..... ON
FUEL PUMP Switch ..... ON
STROBE LIGHTS Switch ..... ON
MIXTURE ..... IDLE CUT-OFF
PFD Annunciations ..... CONSIDER
Propeller ..... CLEAR
ENGINE START Switch ..... PRESS
MIXTURE (when engine starts) ..... ADVANCE
THROTTLE ..... ADJUST
Oil Pressure ..... CHECK

ENGINE START - FLOODED

THROTTLE ..... OPEN FULL
BATTERY MASTER Switch ..... ON
ALTR Switch ..... ON
LEFT/RIGHT MAG Switches ..... ON
FUEL PUMP Switch ..... OFF
STROBE LIGHTS Switch ..... ON
MIXTURE ..... IDLE CUT-OFF
PFD Annunciations ..... CONSIDER
Propeller ..... CLEAR
ENGINE START Switch ..... PRESS
MIXTURE (when engine starts) ..... ADVANCE
THROTTLE ..... RETARD
Oil Pressure ..... CHECK

4.5d Engine Start Checklists (continued)

ENGINE START - USING EXTERNAL POWER SOURCE

BATTERY MASTER Switch ..... OFF
ALTR Switch ..... OFF
LEFT/RIGHT MAG Switches ..... ON
All Electrical Equipment ..... OFF
External Power ..... APPLY
THROTTLE ..... 1/2 IN. OPEN
FUEL PUMP Switch ..... ON
STROBE LIGHTS Switch ..... ON
MIXTURE ..... PRIME - then IDLE CUT-OFF
PFD Annunciations ..... CONSIDER
Propeller ..... CLEAR
ENGINE START Switch ..... PRESS
MIXTURE (when engine starts) ..... ADVANCE
THROTTLE ..... ADJUST
Oil Pressure ..... CHECK
BATTERY MASTER Switch ..... ON
THROTTLE ..... LOWEST POSSIBLE RPM
External Power ..... DISCONNECT
ALTR Switch ..... ON - Check Ammeter Indication

NOTE

DO NOT ATTEMPT FLIGHT IF THERE IS NO INDICATION OF ALTERNATOR OUTPUT.

4.5e Before Taxiing Checklist

WARM-UP

THROTTLE ..... 800 to 1200 RPM

Avoid prolonged idling at low RPM, as this practice may result in fouled spark plugs.

BEFORE TAXIING

NOTE

Refer to the Pilot's Guides listed in Sections 7.15 and Section 7.17 for normal operating procedures and a complete list of system messages and associated flight crew actions. The pilot should be familiar with the applicable information contained in each Pilot's Guide.

Databases..... VERIFY CURRENCY
CAS Messages ..... CONSIDER ANY ILLUMINATED
PFD Annunciations ..... CONSIDER ANY ILLUMINATED
Fuel Calc tab (Eng page) ..... ENTER FUEL QUANTITY
Weight and Balance (MAIN MENU) ..... ENTER WEIGHTS
System Messages ..... CONSIDER
Lights..... AS REQUIRED
Ventilation, Heater and Defroster ..... AS DESIRED
COM/NAV Radios & AVIONICS ..... CHECK & SET

4.5e Before Taxiing Checklist (continued)

NOTE

During ground operations, the G3X will display the transponder status as GND and the transponder will display ALT (Altitude Reporting mode). The GNX 375 transponder has no ground (GND) mode option therefore it can only display ALT. With the GNX 375 transponder in ALT mode, all aircraft air and ground transmissions are automatically handled via the transponder and require no pilot action. Always use the ALT mode while in the air and on the ground, unless otherwise requested by ATC.

Autopilot (if installed)..... Verify Preflight Self-Test (PFT) completed
Standby Flight Instrument..... VERIFY ON with NO RED-X's or FAILURE ANNUNCIATIONS
Altimeter/Standby Altimeter.....SET
Passenger Briefing .....COMPLETE
PARK BRAKE ..... RELEASE

4.5f Taxiing Checklist

TAXIING

Taxi area.....CLEAR
PARK BRAKE ..... RELEASED
Throttle..... APPLY SLOWLY
Brakes..... CHECK
Steering ..... CHECK

NOTE

During taxi, if the VOLTS indication decreases into the warning range, increase engine RPM (if possible) to retain adequate battery charging.

NOTE

During extended periods of engine idle at high ambient temperatures, fuel flow to the engine can be interrupted by the formation of fuel vapor bubbles in the fuel line resulting in rough idle operation. To correct this condion, see section 4.13.

Before attempting to taxi the airplane, ascertain that the propeller back blast and taxi areas are clear. Power should be applied slowly to start the taxi roll. Observe wing clearances when taxiing near buildings or other stationary objects. If possible, station an observer outside the airplane. Avoid holes and ruts when taxiing over uneven ground. Do not operate the engine at high RPM when taxiing over ground containing loose stones, gravel or any loose material that may cause damage to the propeller blades.

4.5g Ground Check Checklist

GROUND CHECK

PARK BRAKE .....SET
THROTTLE ..... 2000 RPM
LEFT/RIGHT MAG Check ..... MAX. DROP 175 RPM
MAX. DIFF. 50 RPM
Oil Temperature ..... CHECK
Oil Pressure ..... CHECK
VOLTS Indication.....CHECK BUS (28 +/- 1 VOLT)
ALT AMPS Indication.....CHECK NORMAL
ALT. AIR ..... CHECK for RPM drop
FUEL PUMP Switch..... OFF
Verify Engine Operation
THROTTLE .....RETARD

Autopilot (if installed):

Autopilot ..... ENGAGE
Flight Controls ..... CHECK (verify autopilot can be overpowered in pitch and roll)
A/P DISC Button ..... PRESS (verify autopilot disengages and audio alert is heard)

NOTE

Operation on one magneto should not exceed 10 seconds.

NOTE

Avoid prolonged ground operation with ALT. AIR OPEN as the air is unfiltered.

4.5h Before Takeoff Checklist

BEFORE TAKEOFF

BATTERY MASTER Switch..... VERIFY ON
ALTR Switch ..... VERIFY ON
FUEL PUMP Switch.....ON
LEFT/RIGHT MAG Switches..... VERIFY ON
Flight Instruments .....CHECK
Standby Flight Instrument.....CHECK
CAS Messages ..... CONSIDER ANY ILLUMINATED
PFD Annunciations..... CONSIDER ANY ILLUMINATED
System Messages .....CONSIDER
FUEL Selector..... PROPER TANK
Engine Indications.....CHECK
ALT. AIR .....CLOSE
MIXTURE.....SET
Seat Backs .....ERECT
Seats .....ADJUSTED AND LOCKED IN POSITION
Belts/Harness.....FASTENED/CHECK
Empty Seats..... SEAT BELTS SECURELY FASTENED
Flaps .....SET
Stabilator and Rudder Trims.....SET
Controls .....FREE AND CORRECT
Door.....LATCHED

NOTE

Electronic Stability & Protection (ESP) should be enabled/disabled by the pilot prior to flight (touch Autopilot Status Box, then ESP button).

Takeoff should not be attempted with ice, snow, or frost on the wings. To achieve the takeoff performance specified in Section 5, it is necessary to set maximum power prior to brake release. Takeoff distances shown in Section 5 will be increased by uphill runway gradient, soft, wet, rough or grassy runway surface, or poor pilot technique. As power is applied at the start of the takeoff, monitor the engine instruments to verify that the engine is operating properly and the airspeed indicator to confirm that it is functioning. Full throttle should also be achieved without engine backfiring, skipping, faltering or a reduction in engine oil pressure.

4.5i Takeoff Checklist

TAKEOFF

NORMAL TECHNIQUE

Flaps ..... Up
Trim ..... SET
Brakes ..... APPLY & HOLD
THROTTLE ..... FULL POWER
Brakes ..... RELEASE
Rotation Airspeed ..... 60 KIAS
SMOOTHLY ROTATE TO CLIMB ATTITUDE

See Flaps Up Takeoff ground roll and Flaps Up Takeoff Performance charts in Section 5 for ground roll/takeoff distances and applicable gross weight vs rotation speed information. The rotation airspeed shown is applicable for the airplane at maximum gross weight.

When the available runway length is well in excess of that required and obstacle clearance is no factor, a rolling takeoff technique (no brakes prior to application of power) may be used.

SHORT FIELD, OBSTACLE CLEARANCE

Flaps ..... 25º (second notch)
Trim ..... Slightly Aft of Neutral
Brakes ..... APPLY & HOLD
THROTTLE ..... FULL POWER
Brakes ..... RELEASE
Rotation Airspeed ..... 55 KIAS
ROTATE TO CLIMB ATTITUDE
Obstacle Clearance Airspeed ..... 60 KIAS
Initial Climb Airspeed (Flaps 0º) ..... 64 KIAS
Flaps ..... RETRACT SLOWLY
After Obstacles Cleared & Safe Altitude
Airpseed ..... 76 KIAS

For departure from short runways with adjacent obstructions, a short field takeoff technique with flaps set to 25° should be used. See 25° Flaps Takeoff ground roll and 25° Flaps Takeoff Performance charts in Section 5 for ground roll/takeoff distances and applicable gross weight vs airspeed information. The rotation and 50 ft. obstacle clearance airspeeds shown are applicable for the airplane at maximum gross weight.

4.5j Climb Checklist

CLIMB

Best rate (flaps up) ..... 76 KIAS
Best angle (flaps up) ..... 64 KIAS
Enroute ..... 87 KIAS
FUEL PUMP Switch.....OFF at desired altitude

For climbing enroute, a speed of 87 KIAS is recommended. This will produce better forward speed and increased visibility over the nose during the climb.

4.5k Cruise Checklist

CRUISING

Power..... SET PER POWER TABLE
MIXTURE..... ADJUST

The cruising speed of the Piper Pilot is determined by many factors, including power setting, altitude, temperature, loading and equipment installed in the airplane. The normal maximum cruising power is 75% of the rated horsepower of the engine. Airspeeds which may be obtained at various altitudes and power settings can be determined from the performance graphs provided in Section 5.

Use of the mixture control in cruising flight reduces fuel consumption significantly, especially at higher altitudes. The mixture should be leaned during cruising operation above 5000 ft. altitude and at pilot's discretion at lower altitudes when 75% power or less is being used. If any doubt exists as to the amount of power being used, the mixture should be in the full RICH position for all operations under 5000 feet. To lean the mixture, pull the mixture control aft.

Best economy mixture is obtained by moving the mixture control aft until peak EGT is reached. Best power mixture is obtained by leaning to peak EGT and then enrichening until the EGT is 100°F rich of the peak value. Under some conditions of altitude and throttle position, the engine may exhibit roughness before peak EGT is reached. If this occurs, the EGT corresponding to the onset of engine roughness should be used as the peak reference value.

4.5k Cruise Checklist (continued)

CRUISING (continued)

The FUEL PUMP Switch should be turned ON before switching tanks, and should be left ON for a short period thereafter. In order to keep the airplane in best lateral trim during cruising flight the fuel should be used alternately from each tank. Do not run tanks completely dry in flight. The FUEL PUMP Switch should be normally OFF so that any malfunction of the engine driven fuel pump is immediately apparent. If signs of fuel starvation should occur at any time during flight, fuel exhaustion should be suspected, at which time the fuel selector should be immediately positioned to the other tank and the electric fuel pump switched to the ON position.

4.5l Descent Checklist

DESCENT

Normal Descent:

THROTTLE ..... 2500 RPM
Airspeed ..... 122 KIAS
MIXTURE..... RICH

Power Off Descent:

THROTTLE ..... CLOSED
Airspeed ..... AS REQUIRED
MIXTURE..... AS REQUIRED
Power..... VERIFY WITH THROTTLE EVERY 30 SECONDS

4.5m Approach and Landing Checklist

APPROACH AND LANDING

NOTE

The navigation source will not automatically change from GPS to a VHF navigation source when intercepting the final approach course of a ILS, LOC, LOC BC, LDA, or SDF approach. The CDI must be changed manually to LOC2 (NAV2 source) prior to conducting the approach and arming the autopilot.

NOTE

The autopilot will not couple to the glideslope when the airplane is more than ~15 miles from the runway.

NOTE

NAV mode (not APR mode) must be selected when conducting an autopilot-coupled LOC BC approach.

NOTE

LOC BC course guidance provided by the lateral course deviation indicators (green diamonds) on the G5 standby instrument and G3X will be reverse sensing. Lateral course guidance on the G3X HSI will be direct/proper sensing when the course pointer on the G3X is set to the front course.

NOTE

Small deviations from the pitch reference (ALT, GS, GP, etc.) may occur when extending the flaps.

COM/NAV Radios & Avionics ..... CHECK & SET
Altimeter/Standby Altimeter ..... SET
Seat Backs ..... ERECT
Seat Belts, Harnesses ..... FASTEN/ADJUSTED
Armrests ..... STOWED
FUEL PUMP Switch ..... ON
FUEL Selector ..... PROPER TANK
FLAPS ..... SET (102 KIAS max.)
ALT. AIR ..... AS REQUIRED

4.5m Approach and Landing Checklist (continued)

APPROACH AND LANDING (continued)

MIXTURE.....FULL RICH
LANDING LIGHT Switch ..... AS REQUIRED
PARK BRAKE .....Verify OFF
Toe Brakes .....DEPRESS TO CHECK
Autopilot (if installed)..... DISCONNECT
(Above 200 FT AGL)
Initial Approach Speed .....75-95 KIAS
Final Approach Speed (Flaps 40°) ..... 66 KIAS
Touchdown.....MAIN WHEELS
then GENTLY LOWER NOSE
Braking..... AS REQUIRED

Check to ensure the fuel selector is on the proper (normally fullest) tank and that the seat backs are erect, with the seats adjusted and locked in position. The seat belts and shoulder harness should be fastened and adjusted and the inertia reel checked.

The mixture control should be kept in full RICH position to ensure maximum acceleration if it should be necessary to open the throttle again. ALT. AIR should be closed unless there is an indication of induction system icing, since the use of alternate air causes a reduction in power which may be critical in case of a go-around. Full throttle operation with ALT. AIR OPEN can cause detonation.

The amount of flap used during landings and the speed of the aircraft at contact with the runway should be varied according to the landing surface and conditions of wind and airplane loading. It is generally good practice to contact the ground at the minimum possible safe speed consistent with existing conditions.

Normally, the best technique for landings is to use full flap and enough power to maintain the desired airspeed and approach flight path. Reduce the speed during the flareout and contact the ground close to the stalling speed. After ground contact hold the nose wheel off as long as possible. As the airplane slows down, gently lower the nose and apply the brakes. Braking is most effective when flaps are raised and back pressure is applied to the control wheel, putting most of the aircraft weight on the main wheels. In high wind conditions, particularly in strong crosswinds, it may be desirable to approach the ground at higher than normal speeds with partial or no flaps.

4.5n Go-Around Checklist

GO-AROUND

MIXTURE.....FULL RICH
THROTTLE.....FULL OPEN
Control Wheel.....BACK PRESSURE TO OBTAIN POSITIVE CLIMB ATTITUDE
FLAPS..... RETRACT INCREMENTALLY

AUTOPILOT COUPLED GO-AROUND

CAUTION

The autopilot coupled go-around may produce climb performance less than that shown in Figure 5-15.

CAUTION

Large deviations between the current airspeed and the IAS target airspeed could produce high pitch attitudes while capturing the airspeed target.

MIXTURE.....FULL RICH
THROTTLE.....Select TO/GA and FULL OPEN
FLAPS..... RETRACT INCREMENTALLY

After stabilized in climb:
Flight Director Modes.....RESELECT as required

4.5o After Landing Checklist

AFTER LANDING

Clear of runway.

FLAPS.....RETRACT
FUEL PUMP Switch..... OFF
STROBE LIGHTS Switch..... AS REQUIRED
LANDING LIGHT Switch ..... AS REQUIRED

NOTE

During extended periods of engine idle at high ambient temperatures, fuel flow to the engine can be interrupted by the formation of fuel vapor bubbles in the fuel line resulting in rough idle operation. To correct this condion, see section 4.13.

NOTE

During ground operations, the G3X will display the transponder status as GRD and the transponder will display ALT (Altitude Reporting mode). This is expected because the transponder has no GRD mode option. With the transponder in ALT mode, all aircraft air and ground transmissions are automatically handled via the transponder and require no pilot action. Always use the ALT mode while in the air and on the ground, unless otherwise requested by ATC.

4.5p Stopping Engine Checklist

STOPPING ENGINE

CAUTION

The flaps must be placed in the up position for the flap stop to support weight.

PARK BRAKE .....SET
FLAPS.....RETRACT
FUEL PUMP Switch..... OFF
Electrical Switches..... OFF
ALTR Switch ..... OFF
THROTTLE ..... CLOSED
MIXTURE.....IDLE CUT-OFF
LEFT/RIGHT MAG Switches..... OFF
Interior Lights (at night) ..... OFF
Exterior Lights ..... OFF
BATTERY MASTER Switch..... OFF

NOTE

In case the standby instrument remains "ON" due to improper shutdown, the unit switches to internal battery and depletes it. To turn off the Garmin G5 standby instrument, press and hold the power button for five seconds.

4.5q Mooring Checklist

MOORING

PARK BRAKE ..... AS REQUIRED
Flaps .....VERIFY RETRACTED
Control wheel.....SECURED WITH BELTS
Wheel chocks .....IN PLACE
Tie downs..... SECURE

4.5q Mooring Checklist (continued)

If necessary, the airplane should be moved on the ground with the aid of the nose wheel tow bar provided with each airplane and then re-secure the tow bar. The aileron and stabilator controls should be secured by looping the safety belt through the control wheel and pulling it snug. The flaps are locked when in the UP position and should be left retracted. Tie downs can be secured to rings provided under each wing and to the tail skid. The rudder is held in position by its connections to the nose wheel steering and normally does not have to be secured.

4.7 STALLS

The stall characteristics of the Piper Pilot are conventional. An approaching stall is indicated by a stall warning tone which is activated between five and ten knots above stall speed. Mild airframe buffeting and gentle pitching may also precede the stall.

The maximum gross weight stalling speed of the Piper Pilot with power off and full flaps is 45 KIAS. With the flaps, up this speed is increased 5 KTS. Loss of altitude during stalls varies from 100 to 350 feet, depending on configuration and power.

During preflight, the stall warning system should be checked by turning the BATTERY MASTER Switch ON, lifting the detector and verifying the Stall warning tone is audible. The BATTERY MASTER Switch should be turned OFF after the check is complete.

4.9 TURBULENT AIR OPERATION

In keeping with good operating practice used in all aircraft, it is recommended that when turbulent air is encountered or expected, the airspeed be reduced to the maximum operating maneuvering speed (Vo) to reduce the structural loads caused by gusts and to allow for inadvertent speed build-ups which may occur as a result of the turbulence or of distractions caused by the conditions. (See Section 2.3)

4.11 NOISE LEVEL

(a) 14 CFR Part 36, Appendix G for aircraft with the standard exhaust system, the noise level is 73.1 dB(A).

No determination has been made by the Federal Aviation Administration that the noise levels of this airplane are or should be acceptable or unacceptable for operation at, into, or out of, any airport.

The above statement notwithstanding, the noise level stated above has been verified by and approved by the Federal Aviation Administration in noise level test flights conducted in accordance with 14 CFR Part 36, Noise Standards - Aircraft Type and Airworthiness Certification. This aircraft model is in compliance with all 14 CFR Part 36 noise standards applicable to this type.

(b) ICAO Annex 16, Volume I, Chapter 10 for aircraft with the standard exhaust system, the noise level is 77.7 dB(A).

4.13 RECOMMENDED PROCEDURES FOR ELIMINATION OF FUEL VAPOR

Fuel vapor can occur in the fuel system during ground operations when high ambient temperatures are present. The symptoms of fuel vapor can include:

(a) Fluctuation of idle speed and fuel flow
(b) Poor engine response to throttle movement
(c) Engine will not operate when throttle is closed
(d) High RPM drop (greater than 175 RPM) during mag check

If one or more symptoms of vapor in the fuel system occur during ground operation, do the following:

(a) Advance the throttle to an engine speed of 1800 to 2000 RPM. Continue at this power setting for ~ 1-2 minutes or until smooth engine operation. Make sure oil temperature stays within limits.
(b) Retard throttle to idle and check for smooth operation.
(c) During taxi, lean mixture and operate at as high a power setting (1200 RPM max) as practical.
(d) Prior to takeoff, set the mixture to the full rich position (for high elevation fields, mixture leaning could be necessary for smooth engine operation).
(e) Prior to initiation of takeoff roll, set full throttle and verify smooth engine operation.

TABLE OF CONTENTS
SECTION 5
PERFORMANCE

Paragraph No.		Page No.
5.1	General	5-1
5.3	Performance and Flight Planning	5-1
5.5	Flight Planning Example	5-3
5.7	Performance Graphs	5-9
	List of Figures	5-9

THIS PAGE INTENTIONALLY LEFT BLANK

SECTION 5

PERFORMANCE

5.1 GENERAL

All of the required (FAA regulations) and complementary performance information applicable to the Piper Pilot is provided by this section.

Performance information associated with those optional systems and equipment which require handbook supplements is provided by Section 9 (Supplements).

5.3 PERFORMANCE AND FLIGHT PLANNING

The performance information presented in this section is based on measured Flight Test Data corrected to ICAO standard day conditions and analytically expanded for the various parameters of weight, altitude, temperature, etc.

The performance charts are unfactored and do not make any allowance for varying degrees of pilot proficiency or mechanical deterioration of the aircraft. This performance, however, can be duplicated by following the stated procedures in a properly maintained airplane.

Effects of conditions not considered on the charts must be evaluated by the pilot, such as the effect of soft or grass runway surface on takeoff and landing performance, or the effect of winds aloft on cruise and range performance. Endurance can be grossly affected by improper leaning procedures, and inflight fuel flow and quantity checks are recommended.

REMEMBER! To get chart performance, follow the chart procedures.

The information provided by paragraph 5.5 (Flight Planning Example) outlines a detailed flight plan using the performance charts in this section. Each chart includes its own example to show how it is used.

WARNING

Performance information derived by extrapolation beyond the limits shown on the charts should not be used for flight planning purposes.

THIS PAGE INTENTIONALLY LEFT BLANK

5.5 FLIGHT PLANNING EXAMPLE

(a) Aircraft Loading

The first step in planning the flight is to calculate the airplane weight and center of gravity by utilizing the information provided by Section 6 (Weight and Balance) of this handbook.

The basic empty weight for the airplane as certified at the factory has been entered in Figure 6-5. If any alterations to the airplane have been made effecting weight and balance, reference to the aircraft logbook and Weight and Balance Record (Figure 6-7) should be made to determine the current basic empty weight of the airplane.

Make use of the Weight and Balance Loading Form (Figure 6-11) and the C.G. Range and Weight graph (Figure 6-15) to determine the total weight of the airplane and the center of gravity position.

After proper utilization of the information provided, the following weights have been determined for consideration in the flight planning example.

The landing weight cannot be determined until the weight of the fuel to be used has been established [refer to item (g)(1)].

(1)	Empty Weight	1422 lbs.
(2)	Occupants (3 x 230 lbs.)	690 lbs.
(3)	Fuel (6 lb./gal. x 48)	288 lbs.
(4)	Takeoff Weight	2400 lbs.
(5)	Landing Weight (a)(4) minus (g)(1), (2400 lbs. minus 160.2 lbs.)	2240 lbs.

The takeoff weight is below the maximum of 2550 lbs. and the weight and balance calculations have determined that the C.G. position is within the approved limits.

5.5 FLIGHT PLANNING EXAMPLE (continued)

(b) Takeoff and Landing

After determining the aircraft loading, all aspects of takeoff and landing must be considered.

Conditions of the departure and destination airport must be acquired, evaluated and maintained throughout the flight.

Apply the departure airport conditions and takeoff weight to the appropriate Takeoff Performance graph (Figure 5-7 or 5-9) to determine the barrier distance or (Figure 5-11 or 5-13) to determine the length of runway necessary for the takeoff.

The landing distance calculations are performed in the same manner using the existing conditions at the destination airport and, when established, the landing weight.

The conditions and calculations for the example flight are listed below. The takeoff and landing distances required for the example flight have fallen well below the available runway lengths.

	Departure Airport	Destination Airport
(1) Pressure Altitude	2000 ft.	2500 ft.
(2) Temperature	23°C	21°C
(3) Wind Component (Headwind)	8 Kt.	5 Kt.
(4) Runway Length Available	7000 ft.	4500 ft.
(5) Runway Required	1073 ft.*	820 ft.**

NOTE

The remainder of the performance charts used in this flight plan example assume a no wind condition. The effect of winds aloft must be considered by the pilot when computing climb, cruise and descent performance.

*reference Figure 5-11 or 5-13
**reference Figure 5-43

(c) Climb

The next step in the flight plan is to determine the necessary climb segment components.

The desired cruise pressure altitude and corresponding cruise outside air temperature values are the first variables to be considered in determining the climb components from the Time, Distance and Fuel to Climb graph (Figure 5-17). After the time, distance and fuel for the cruise pressure altitude and outside air temperature values have been established, apply the existing conditions at the departure field to the graph (Figure 5-17). Now, subtract the values obtained from the graph for the field of departure conditions from those for the cruise pressure altitude.

The remaining values are the true fuel, distance and time components for the climb segment of the flight plan corrected for field pressure altitude and temperature.

The following values were determined from the above instructions in the flight planning example.

(1)	Cruise Pressure Altitude	6000 ft.
(2)	Cruise OAT	15°C
(3)	Time to Climb (12 min. minus 3 min.)	9 min.*
(4)	Distance to Climb (17 nm minus 5 nm)	12 nm*
(5)	Fuel to Climb (4 gal. minus 2 gal.)	2 gal. *

*reference Figure 5-17

5.5 FLIGHT PLANNING EXAMPLE (continued)

(d) Descent

The descent data will be determined prior to the cruise data to provide the descent distance for establishing the total cruise distance.

Utilizing the cruise pressure altitude and OAT, determine the basic time, distance and fuel for descent (Figure 5-37). These figures must be adjusted for the field pressure altitude and temperature at the destination airport. To find the necessary adjustment values, use the existing pressure altitude and temperature conditions at the destination airport as variables to find the time, distance and fuel values from the graph (Figure 5-37).

Now, subtract the values obtained from the field conditions from the values obtained from the cruise conditions to find the true time, distance and fuel values needed for the flight plan.

The values obtained by proper utilization of the graphs for the descent segment of the example are shown below.

(1) Time to Descend	
(16 min. minus 6 min.)	10 min.*
(2) Distance to Descend	
(33 nm minus 13 nm)	20 nm*
(3) Fuel to Descend	
(3.2 gal. minus 1.3 gal.)	1.9 gal. *

*reference Figure 5-37

(e) Cruise

Using the total distance to be traveled during the flight, subtract the previously calculated distance to climb and distance to descend to establish the total cruise distance. Refer to the appropriate engine Operator's Manual when selecting the cruise power setting. The established pressure altitude and temperature values and the selected cruise power should now be utilized to determine the true airspeed from the appropriate Speed Power graph (Figure 5-21, 5-23, 5-25 and 5-27).

Calculate the cruise fuel flow for the cruise power setting from the information provided by the engine Operator's Manual.

The cruise time is found by dividing the cruise distance by the cruise speed and the cruise fuel is found by multiplying the cruise fuel flow by the cruise time.

The cruise calculations established for the cruise segment of the flight planning example are as follows:

(1)	Total Distance	314 nm
(2)	Cruise Distance (e)(1) minus (c)(4) minus (d)(2), (314 nm minus 12 nm minus 20 nm)	282 nm
(3)	Cruise Power	65%
(4)	Cruise Speed	117 Kts.*
(5)	Cruise Fuel Consumption	9.5 gal./hr.
(6)	Cruise Time (e)(2) divided by (e)(4), (282 nm divided by 117 kts)	2.4 hrs.
(7)	Cruise Fuel (e)(5) multiplied by (e)(6), (9.5 gal./hr multiplied by 2.4 hrs)	22.8 gal.

*reference Figure 5-23

5.5 FLIGHT PLANNING EXAMPLE (continued)

(f) Total Flight Time

The total flight time is determined by adding the time to climb, the time to descend and the cruise time. Remember! The time values taken from the climb and descent graphs are in minutes and must be converted to hours before adding them to the cruise time.

The following flight time is required for the flight planning example.

(1) Total Flight Time

(c)(3) plus (d)(1) plus (e)(6),	
(.15 hr plus .17 hr plus 2.4 hrs)	2.7 hrs

(g) Total Fuel Required

Determine the total fuel required by adding the fuel to climb, the fuel to descend and the cruise fuel. When the total fuel (in gallons) is determined, multiply this value by 6 lb./gal. to determine the total fuel weight used for the flight.

The total fuel calculations for the example flight plan are shown below.

(1) Total Fuel Required

(c)(5) plus (d)(3) plus (e)(7),	
(2 gal. plus 1.9 gal. plus 22.8 gal.)	26.7 gal.
(26.7 gal. multiplied by 6 lb./gal.)	160.2 lbs

5.7 PERFORMANCE GRAPHS

LIST OF FIGURES

Figure No.		Page No.
5-1	Temperature Conversion	5-11
5-3	Airspeed System Calibration	5-12
5-5	Stall Speeds	5-13
5-7	Flaps Up Takeoff Performance	5-14
5-9	25° Flaps Takeoff Performance	5-15
5-11	Flaps Up Takeoff Ground Roll	5-16
5-13	25° Flaps Takeoff Ground Roll	5-17
5-15	Climb Performance	5-18
5-17	Time, Distance and Fuel to Climb	5-19
5-19	Engine Performance	5-20
5-21	Engine/Cruise Performance (55%)	5-21
5-23	Engine/Cruise Performance (65%)	5-22
5-25	Engine/Cruise Performance (75%)	5-23
5-27	Speed Power	5-25
5-29	Range (No reserve)	5-26
5-31	Range (45 min. reserve)	5-27
5-33	Endurance (No reserve)	5-28
5-35	Endurance (45 min. reserve)	5-29
5-37	Time, Distance and Fuel to Descend	5-30
5-39	Glide Range	5-31
5-41	Landing Performance	5-32
5-43	Landing Ground Roll	5-33

THIS PAGE INTENTIONALLY LEFT BLANK

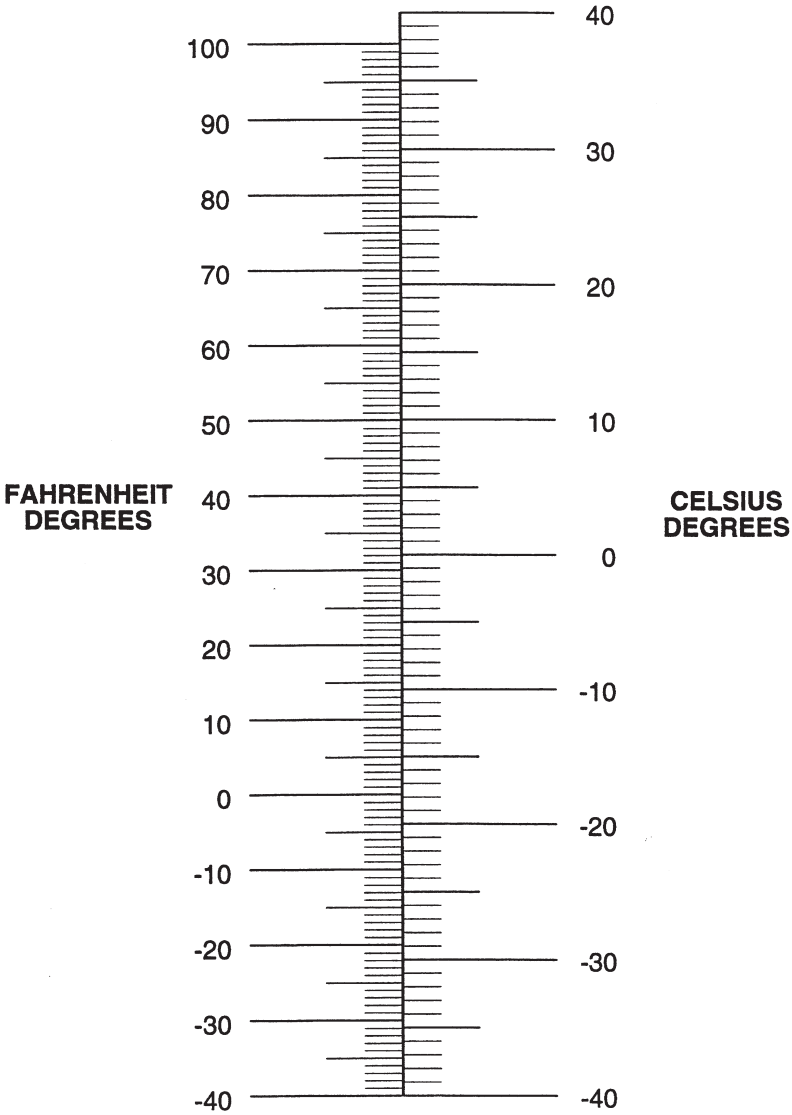

TEMPERATURE CONVERSION

Figure 5-1

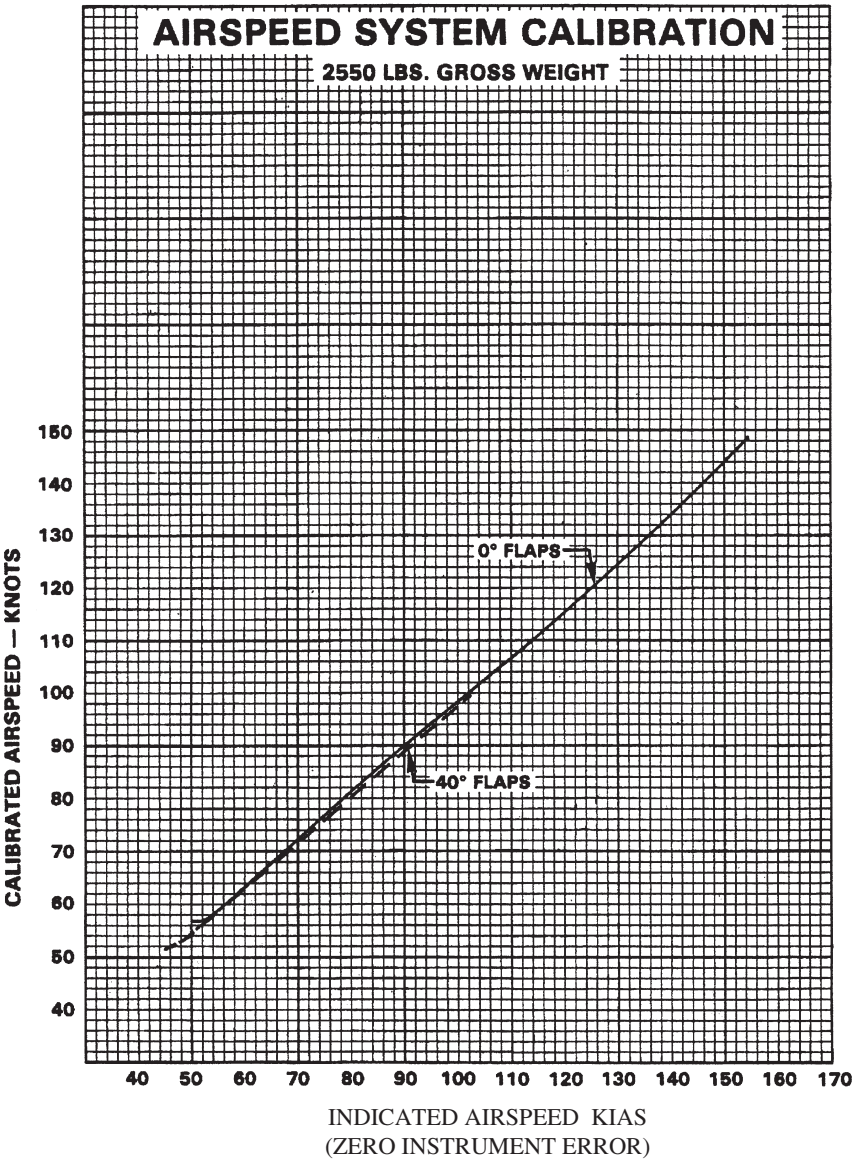

AIRSPEED SYSTEM CALIBRATION
Figure 5-3

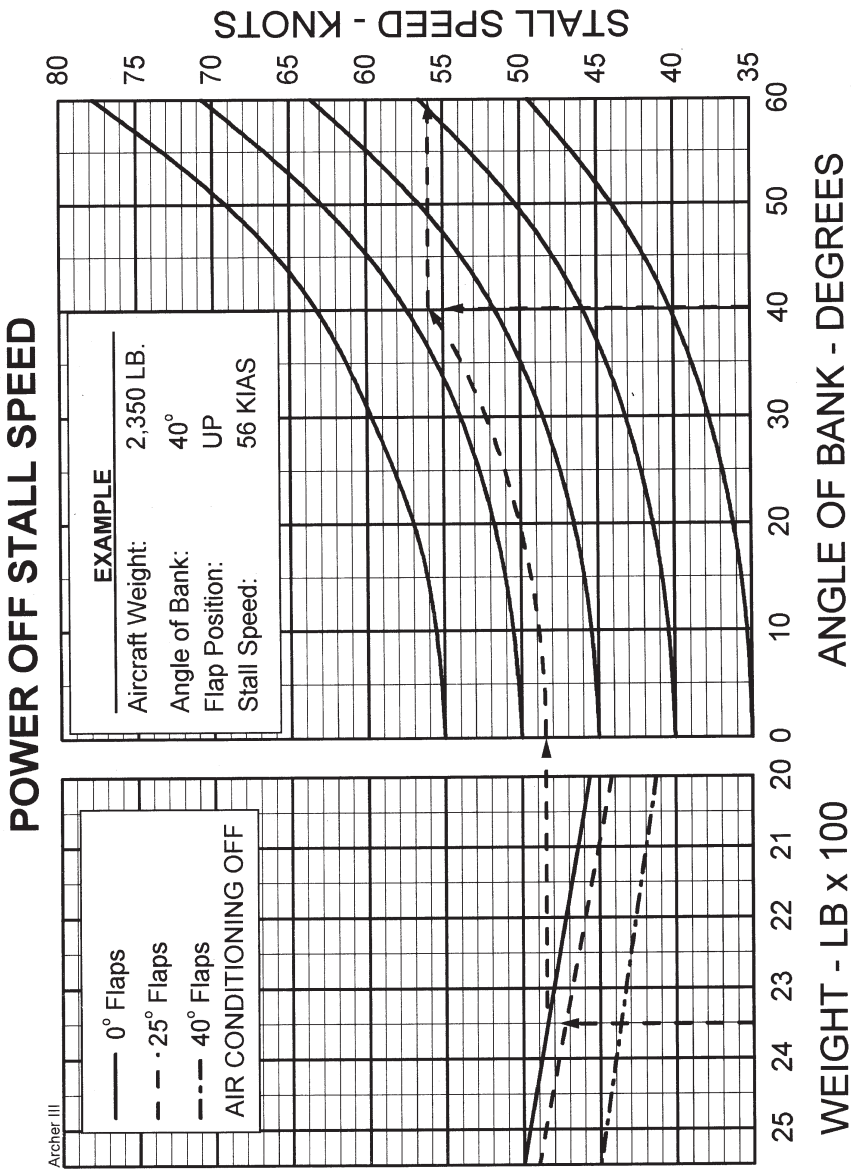

STALL SPEEDS
Figure 5-5

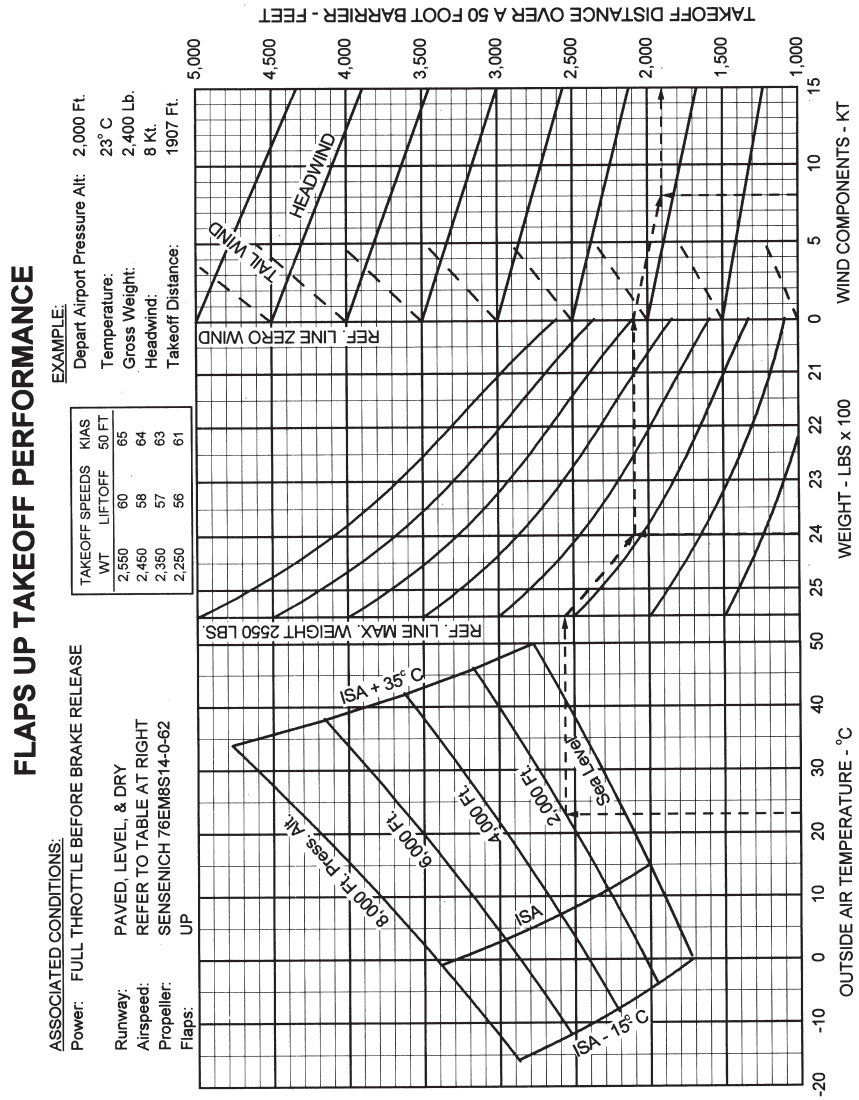

FLAPS UP TAKEOFF PERFORMANCE
Figure 5-7

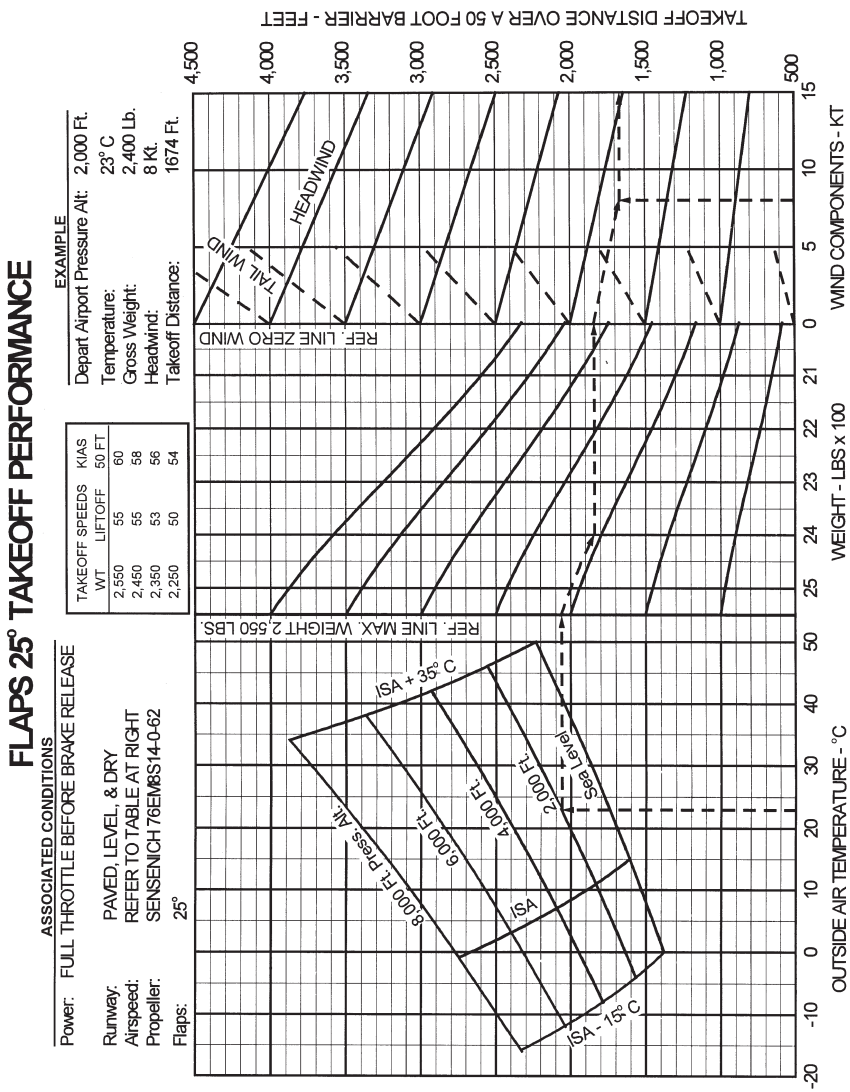

25° FLAPS TAKEOFF PERFORMANCE
Figure 5-9

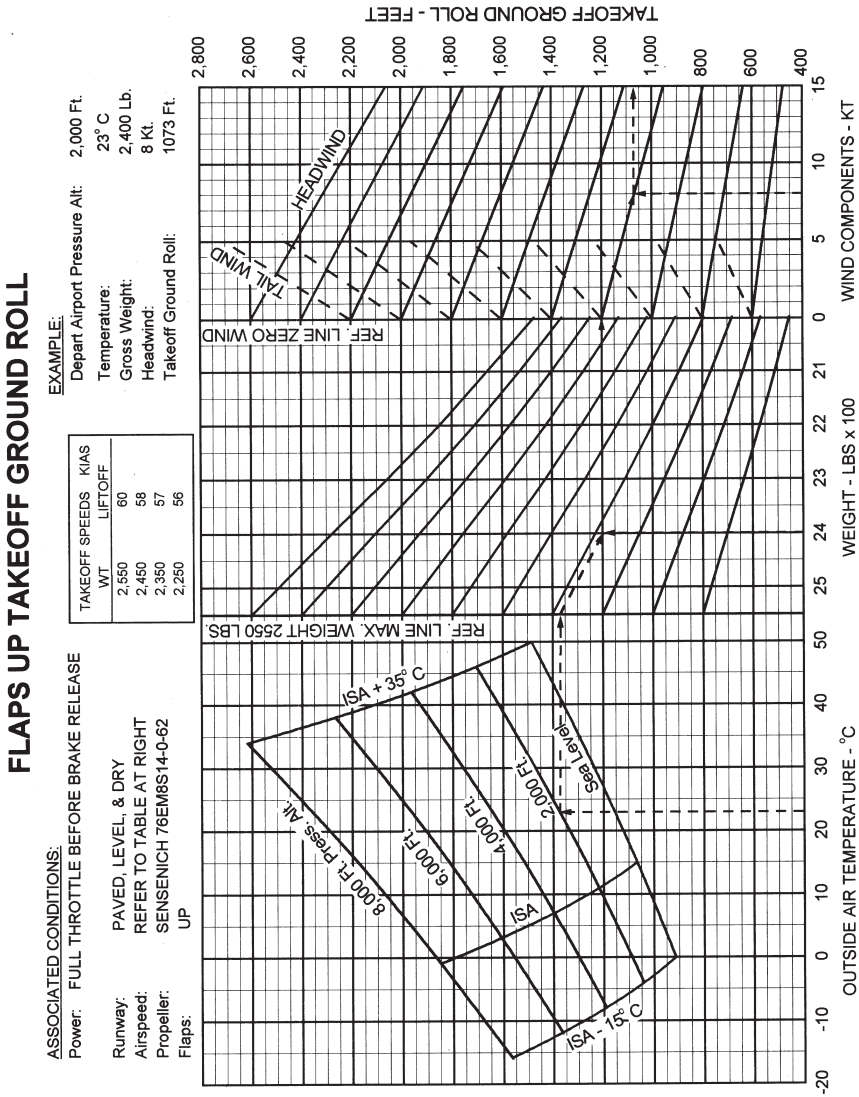

FLAPS UP TAKEOFF GROUND ROLL
Figure 5-11

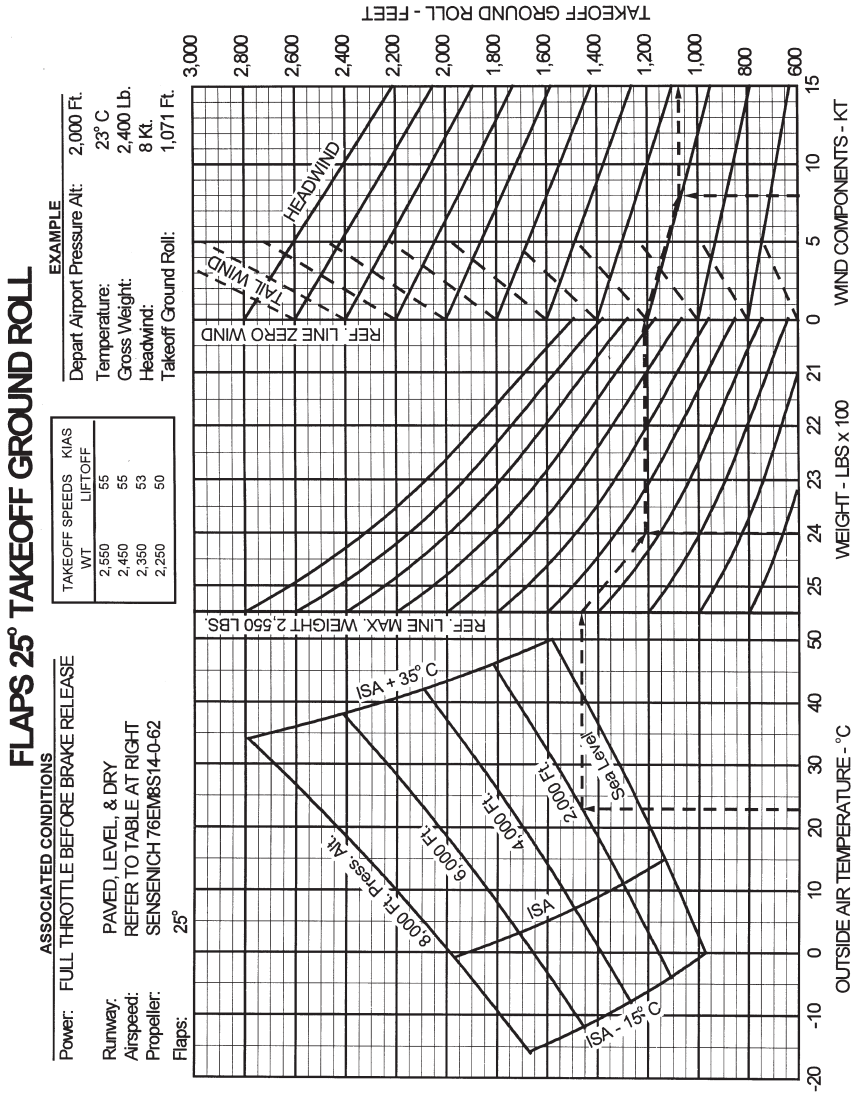

25° FLAPS TAKEOFF GROUND ROLL
Figure 5-13

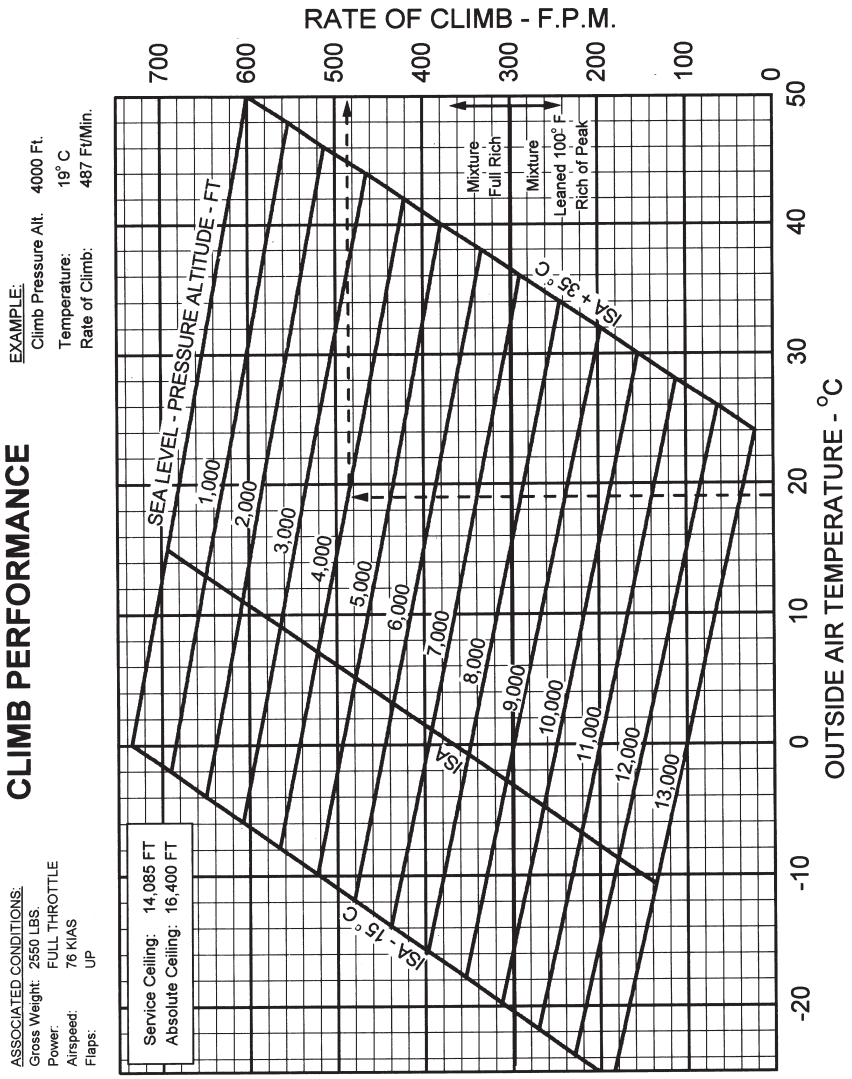

CLIMB PERFORMANCE
Figure 5-15

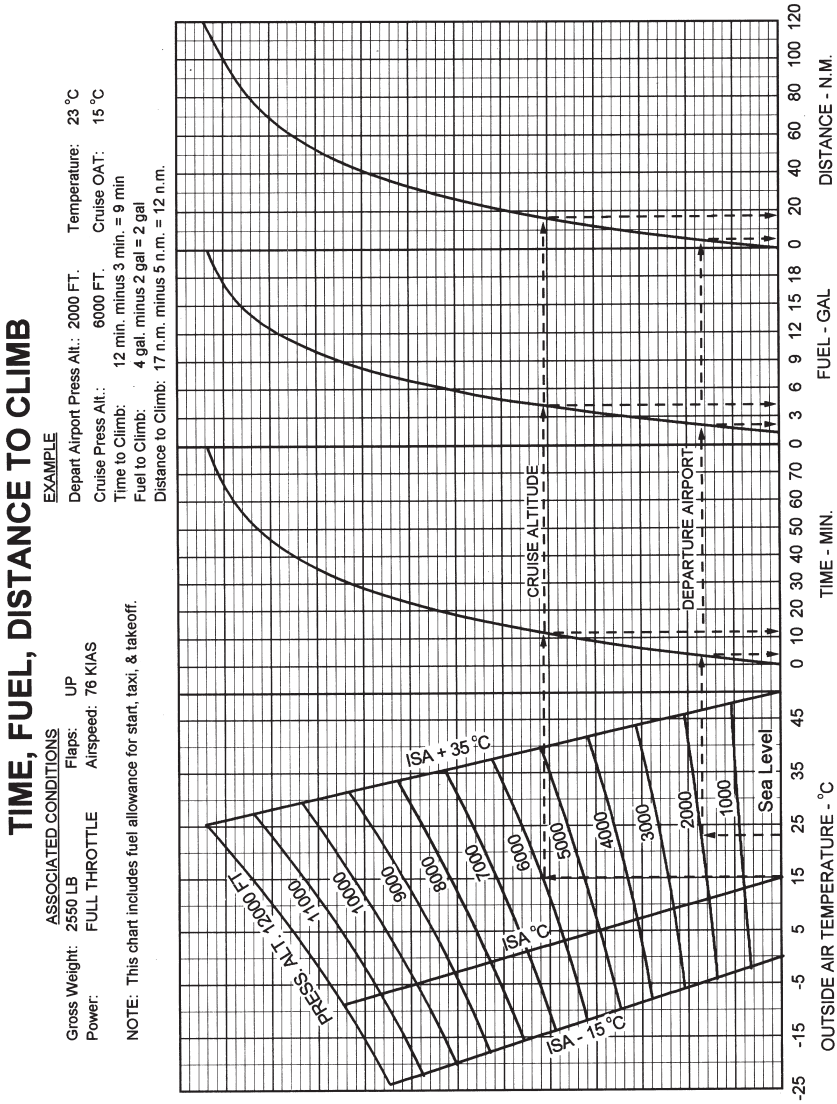

TIME, DISTANCE AND FUEL TO CLIMB
Figure 5-17

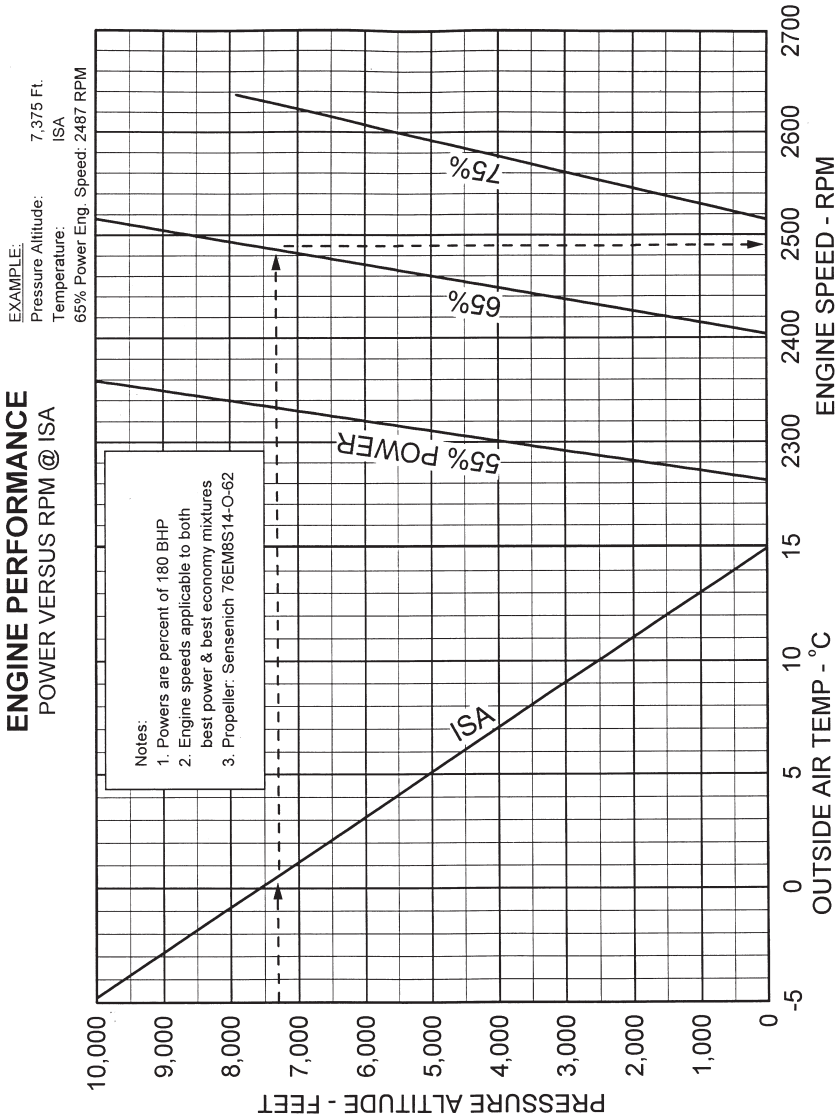

ENGINE PERFORMANCE
Figure 5-19

Engine / Cruise Performance for Non-ISA OAT*
RPM for Constant 55% Power
Fuel Flow: Best Economy Mixture, 8.2 GPH

Pressure Altitude Feet	Indicated Outside Air Temperature °C	°C	°F	Engine Speed RPM	True Air Speed Knots
Sea Level	ISA-15	0	32	2245	102
	ISA	15	59	2265	
	ISA +10	25	77	2275	
	ISA +20	35	95	2285	
	ISA +30	45	113	2295	103
2000	ISA -15	-4	25	2265	103
	ISA	11	52	2280	
	ISA +10	21	70	2295	
	ISA +20	31	88	2305	
	ISA +30	41	106	2315	104
4000	ISA -15	-8	18	2285	103
	ISA	7	45	2300	
	ISA +10	17	63	2315	
	ISA +20	27	81	2325	
	ISA +30	37	99	2335	105
6000	ISA -15	-12	10	2305	104
	ISA	3	37	2320	
	ISA +10	13	55	2330	
	ISA +20	23	73	2345	
	ISA +30	33	91	2355	105
8000	ISA -15	-16	3	2320	104
	ISA	-1	30	2340	
	ISA +10	9	48	2350	
	ISA +17.5	16.5	62	2360	105
9000	ISA -15	-18	0	2330	104
	ISA	-3	27	2350	
	ISA +8.5	5.5	42	2360	105
10000	ISA - 15	-20	-4	2340	104
	ISA	-5	23	2360	105

NOTE: * Aircraft weight 2550 Lbs.

ENGINE/CRUISE PERFORMANCE (55%)
Figure 5-21

Engine / Cruise Performance for Non-ISA OAT*
RPM for Constant 65% Power
Fuel Flow: Best Economy Mixture, 9.5 GPH

Pressure Altitude Feet	Indicated Outside Air Temperature °C	°C	°F	Engine Speed RPM	True Air Speed Knots
Sea Level	ISA-15	0	32	2385	110
	ISA	15	59	2405	
	ISA +10	25	77	2415	
	ISA +20	35	95	2430	
	ISA +30	45	113	2440	113
2000	ISA -15	-4	25	2405	111
	ISA	11	52	2425	
	ISA +10	21	70	2440	
	ISA +20	31	88	2450	
	ISA +30	41	106	2465	114
4000	ISA -15	-8	18	2430	112
	ISA	7	45	2450	
	ISA +10	17	63	2460	
	ISA +20	27	81	2475	
	ISA +30	37	99	2485	115
6000	ISA -15	-12	10	2450	113
	ISA	3	37	2470	
	ISA +10	13	55	2485	
	ISA +20	23	73	2495	
	ISA +30	33	91	2510	116
8000	ISA -15	-16	3	2475	114
	ISA	-1	30	2495	
	ISA +10	9	48	2505	
	ISA +17.5	16.5	62	2515	116
9000	ISA -15	-18	0	2485	114
	ISA	-3	27	2505	
	ISA +8.5	5.5	42	2515	116
10000	ISA -15	-20	-4	2495	115
	ISA	-5	23	2515	116

NOTE: * Aircraft weight 2550 Lbs.

ENGINE/CRUISE PERFORMANCE (65%)
Figure 5-23

Engine / Cruise Performance for Non-ISA OAT*
RPM for Constant 75% Power
Fuel Flow: Best Economy Mixture, 11.0 GPH

Pressure Altitude Feet	Indicated Outside Air Temperature °C	°C	°F	Engine Speed RPM	True Air Speed Knots
Sea Level	ISA-15	0	32	2485	116
	ISA	15	59	2515	
	ISA +10	25	77	2535	
	ISA +20	35	95	2550	
	ISA +30	45	113	2565	121
2000	ISA -15	-4	25	2520	118
	ISA	11	52	2545	
	ISA +10	21	70	2565	
	ISA +20	31	88	2580	
	ISA +30	41	106	2600	123
3000	ISA -15	-6	21	2535	119
	ISA	9	48	2560	
	ISA +10	19	66	2580	
	ISA +20	29	84	2595	
	ISA +30	39	102	2615	124
4000	ISA -15	-8	18	2550	120
	ISA	7	45	2575	
	ISA +10	17	63	2595	
	ISA +20	27	81	2610	
	ISA +30	37	99	2630	125
5000	ISA -15	-10	14	2565	121
	ISA	5	41	2590	
	ISA +10	15	59	2610	
	ISA +20	25	77	2625	
	ISA +25	30	86	2635	125
6000	ISA -15	-12	10	2580	122
	ISA	3	37	2605	
	ISA +10	13	55	2625	
	ISA +15	18	64	2635	125
7000	ISA -15	-14	6.8	2595	123
	ISA	1	34	2625	
	ISA +7.5	8.5	47	2635	125

NOTE: * Aircraft weight 2550 Lbs.

ENGINE/CRUISE PERFORMANCE (75%)
Figure 5-25

THIS PAGE INTENTIONALLY LEFT BLANK

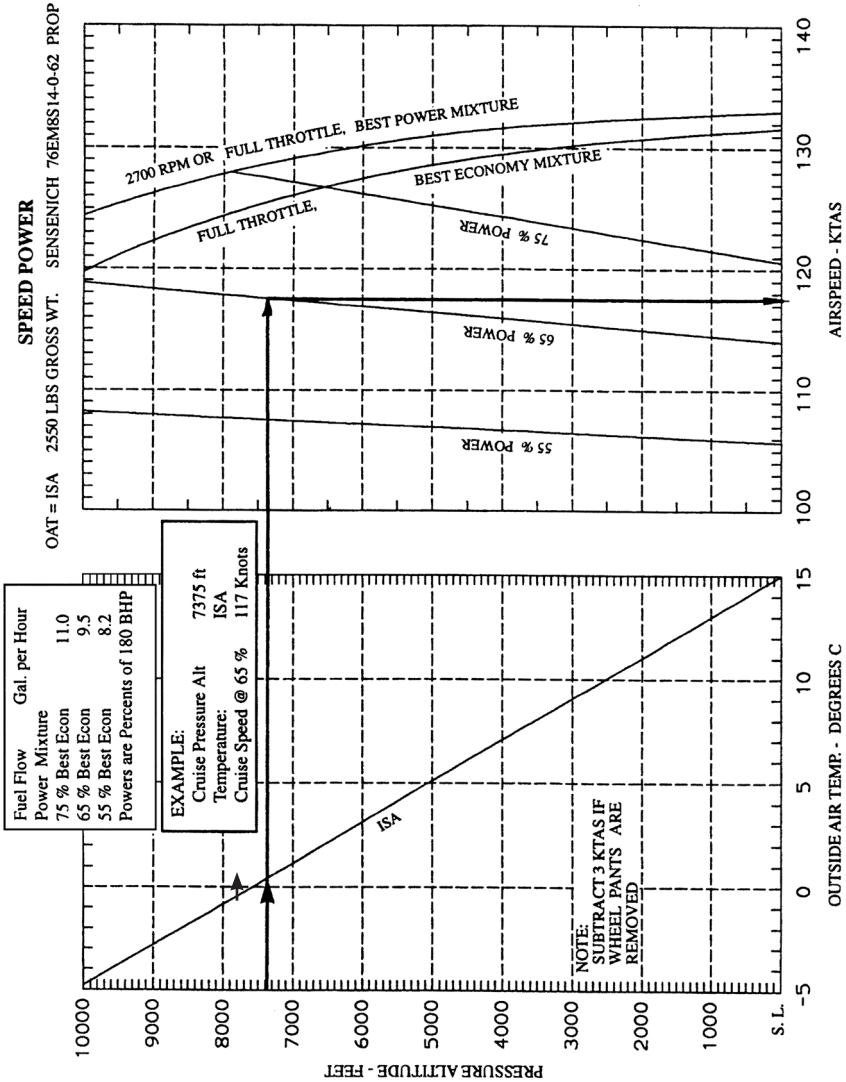

SPEED POWER
Figure 5-27

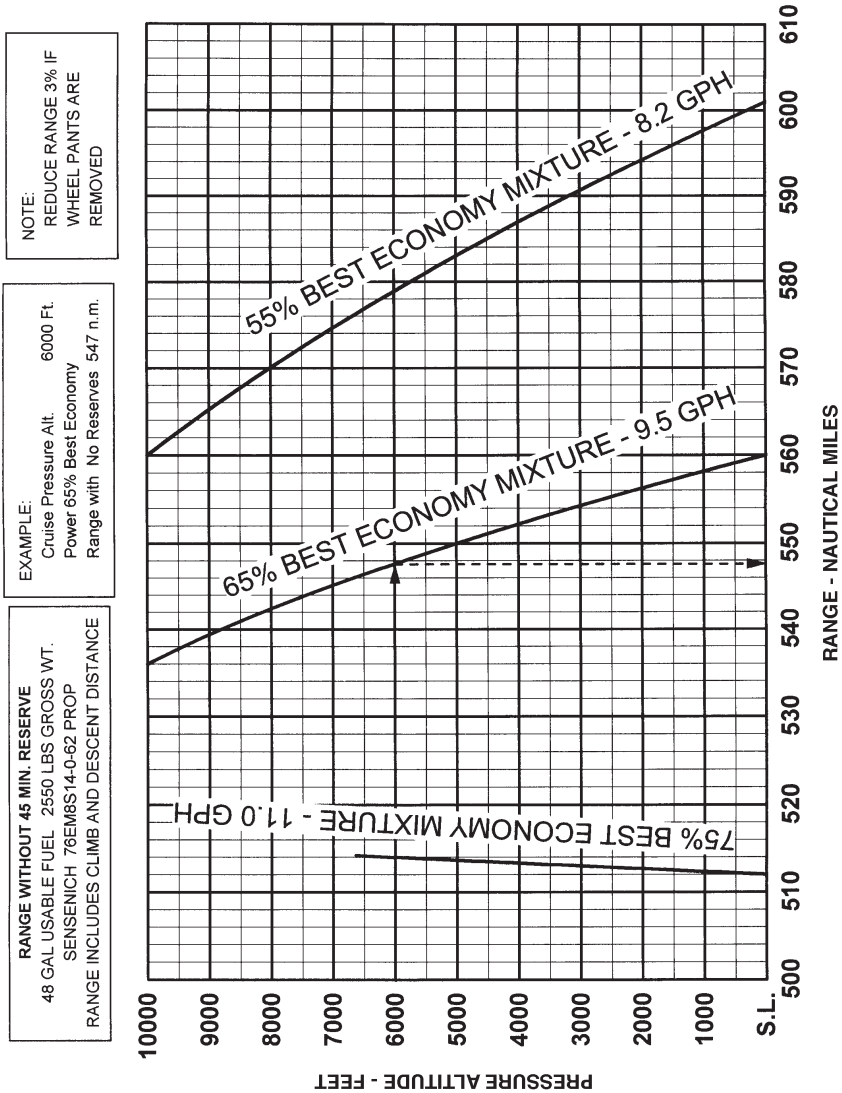

RANGE (NO RESERVE)
Figure 5-29

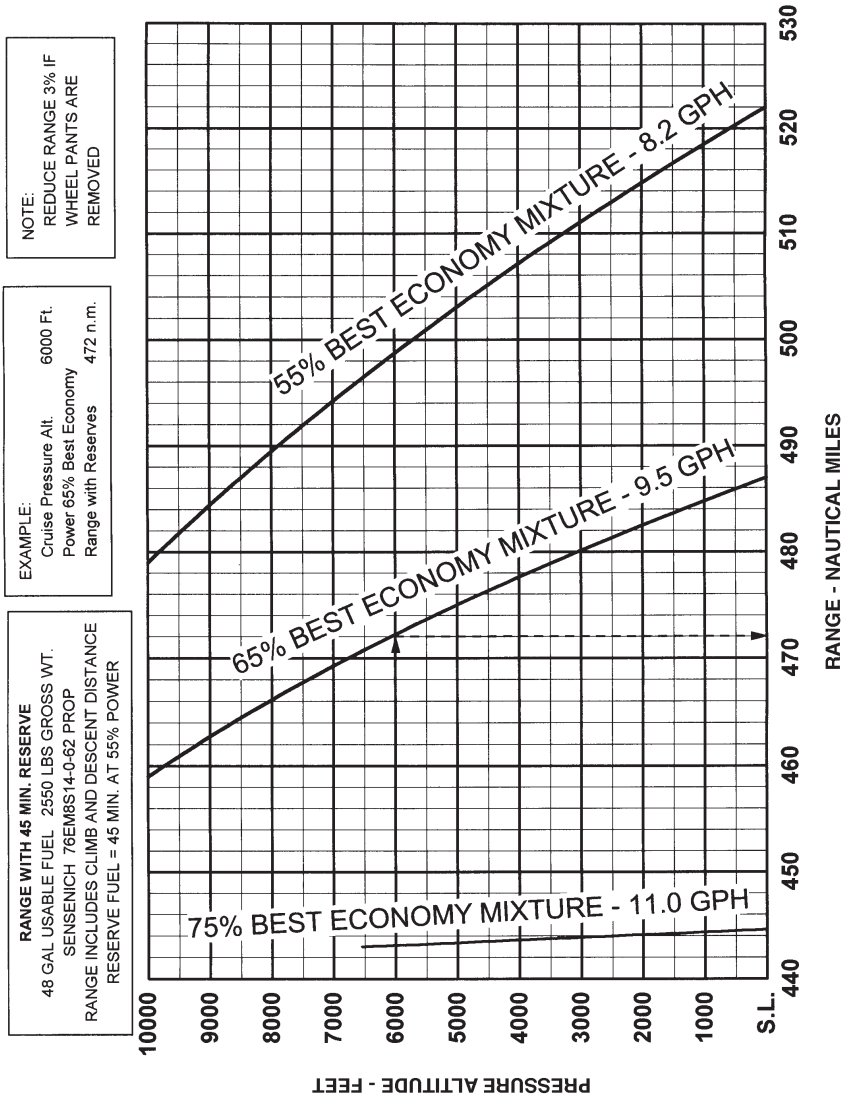

RANGE (45 MIN. RESERVE)
Figure 5-31

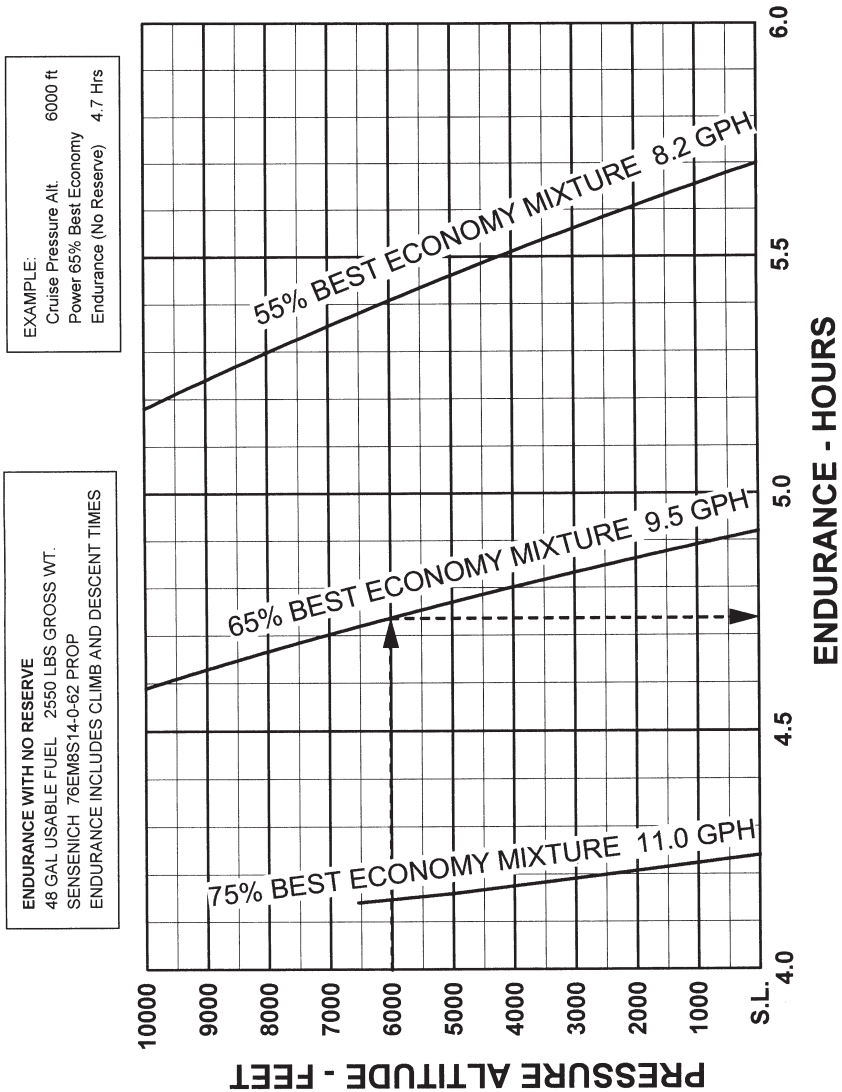

ENDURANCE (NO RESERVE)
Figure 5-33

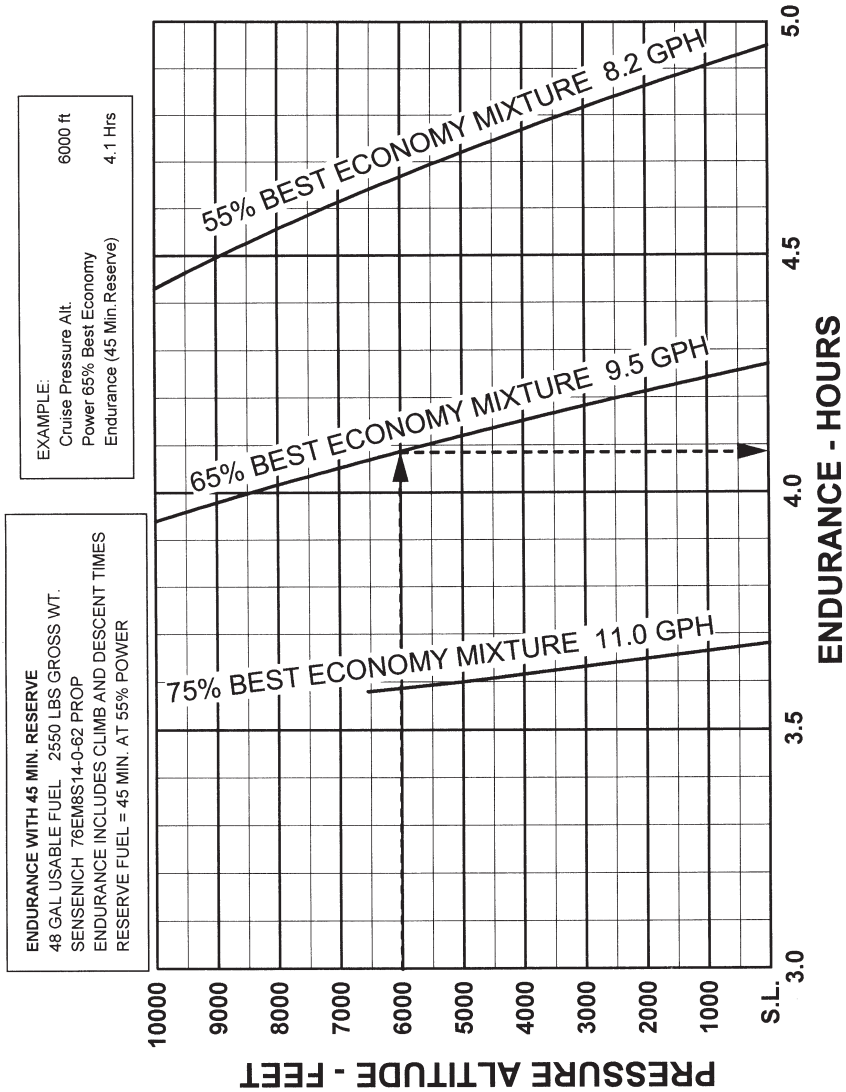

ENDURANCE (45 MIN. RESERVE)
Figure 5-35

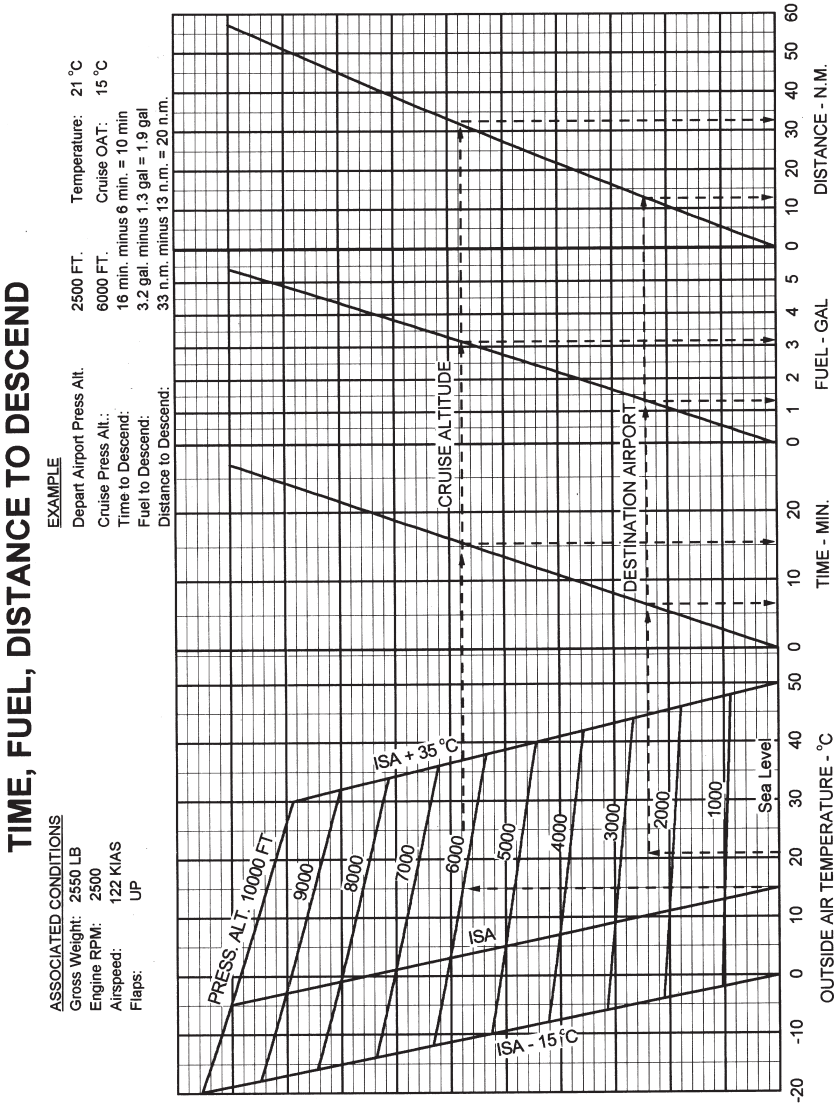

TIME, DISTANCE AND FUEL TO DESCEND
Figure 5-37

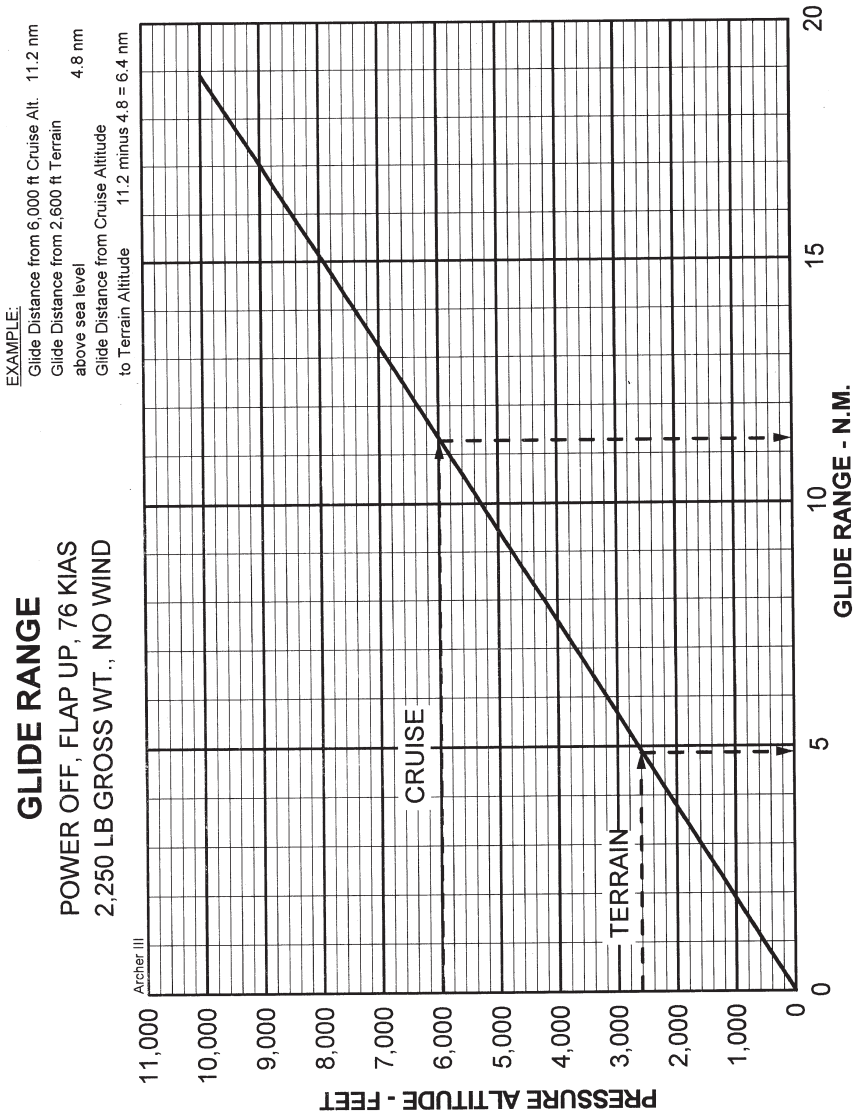

GLIDE RANGE
Figure 5-39

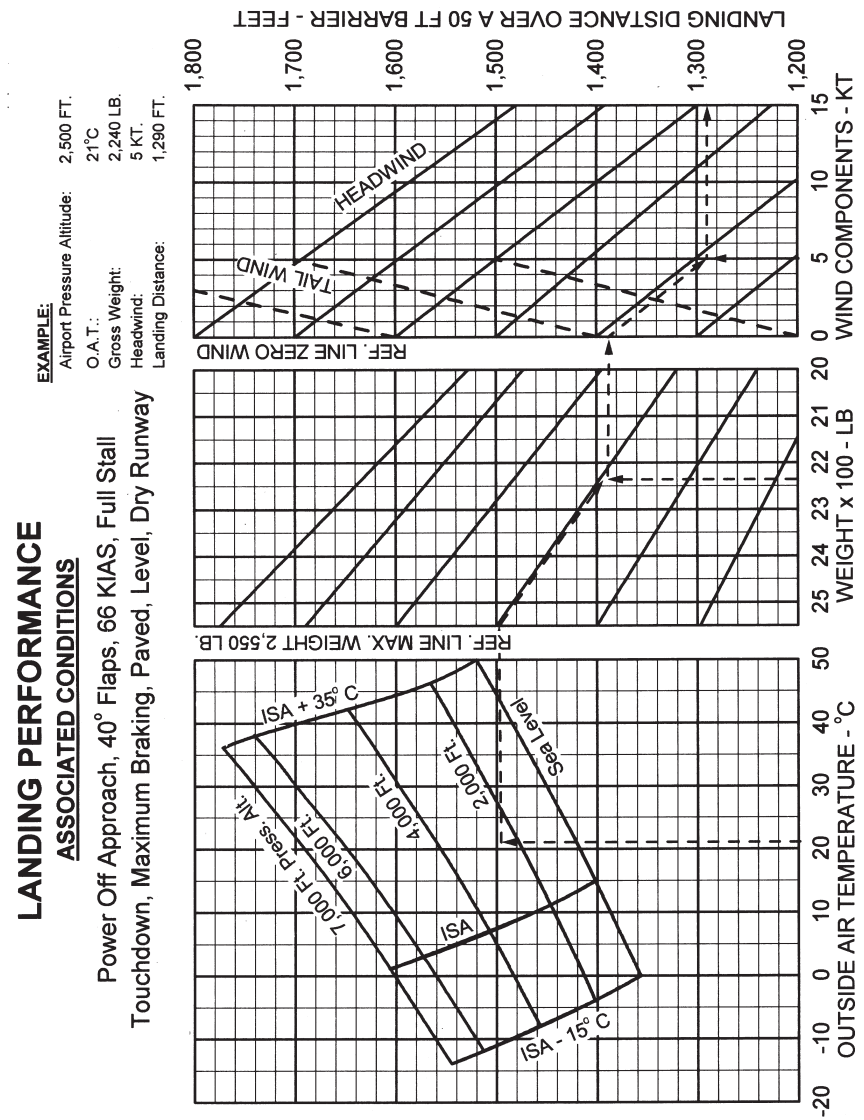

LANDING PERFORMANCE
Figure 5-41

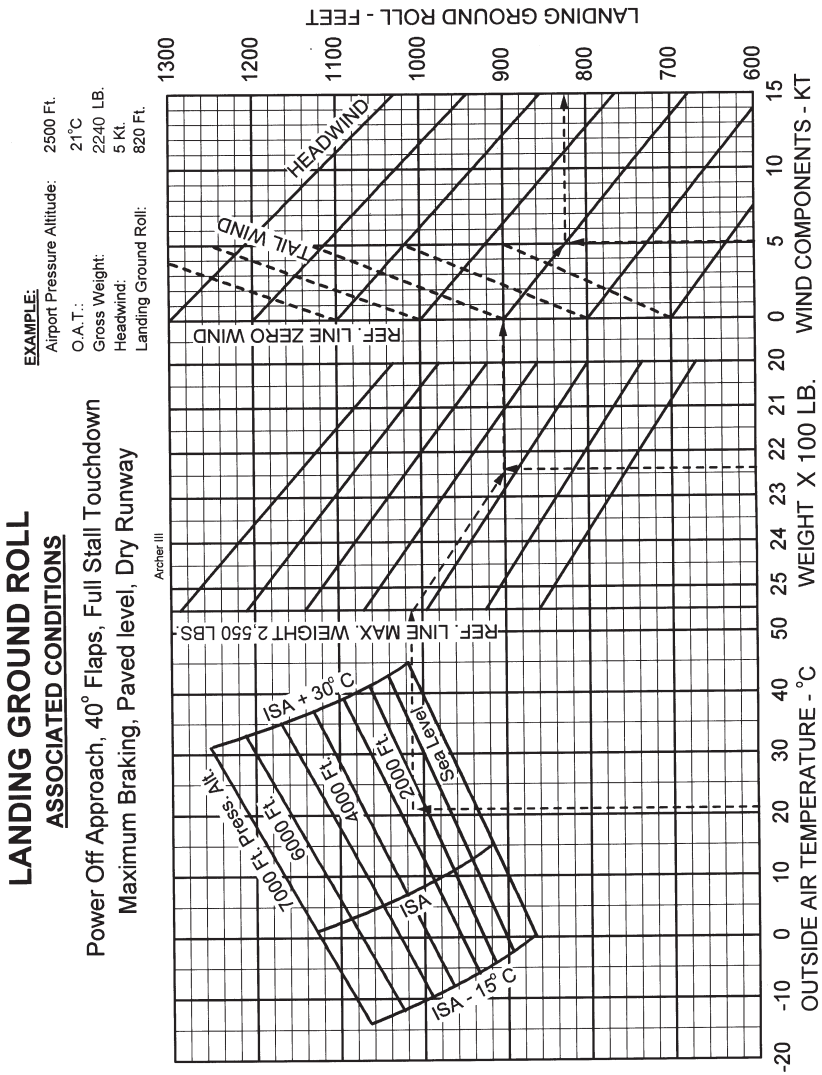

LANDING GROUND ROLL
Figure 5-43

THIS PAGE INTENTIONALLY LEFT BLANK

TABLE OF CONTENTS
SECTION 6
WEIGHT AND BALANCE

Paragraph No.		Page No.
6.1	General	6-1
6.3	Airplane Weighing Procedure	6-2
6.5	Weight and Balance Data and Record	6-5
6.7	Weight and Balance Determination for Flight	6-9
	Equipment List	Supplied with aircraft paperwork.

THIS PAGE INTENTIONALLY LEFT BLANK

SECTION 6

WEIGHT AND BALANCE

6.1 GENERAL

In order to achieve the performance and flying characteristics which are designed into the airplane, it must be flown with the weight and center of gravity (C.G.) position within the approved operating range (envelope). Although the airplane offers flexibility of loading, it may not be able to be flown with the maximum number of adult passengers and full fuel tanks. With the flexibility comes responsibility. The pilot must ensure that the airplane is loaded within the loading envelope prior to performing a takeoff.

Misloading carries consequences for any aircraft. An overloaded airplane will not take off, climb or cruise as well as a properly loaded one. The heavier the airplane is loaded, the less climb performance it will have.

Center of gravity is a determining factor in flight characteristics. If the C.G. is too far forward in any airplane, it may be difficult to rotate for takeoff or landing. If the C.G. is too far aft, the airplane may rotate prematurely on takeoff or tend to pitch up during climb. Longitudinal stability will be reduced. This can lead to inadvertent stalls and even spins; and spin recovery becomes more difficult as the center of gravity moves aft of the approved limit.

A properly loaded airplane, however, will perform as intended. Before the airplane is certified, a basic empty weight and C.G. location is computed (basic empty weight consists of the standard empty weight of the airplane plus the optional equipment). Using the basic empty weight and C.G. location, the pilot can easily determine the weight and C.G. position for the loaded airplane by computing the total weight and moment and then determining whether they are within the approved envelope.

6.1 GENERAL (continued)

The basic empty weight and C.G. location are recorded in the Weight and Balance Data Form (Figure 6-5) and the Weight and Balance Record (Figure 6-7). The current values should always be used. Whenever new equipment is added or any modification work is done, the mechanic responsible for the work is required to compute a new basic empty weight and C.G. position and to write these in the Aircraft Log Book and the Weight and Balance Record. The owner should make sure that it is done.

A weight and balance calculation is necessary in determining how much fuel or baggage can be boarded so as to keep within allowable limits. Check calculations prior to adding fuel to ensure against improper loading.

The following pages are forms used in weighing an airplane in production and in computing basic empty weight, C.G. position, and useful load. Note that the useful load includes usable fuel, baggage, cargo and passengers. Following this is the method for computing takeoff weight and C.G.

6.3 AIRPLANE WEIGHING PROCEDURE

At the time of licensing, Piper provides each airplane with the basic empty weight and center of gravity location. This data is supplied by Figure 6-5.

The removal or addition of equipment or airplane modifications can affect the basic empty weight and center of gravity. The following is a weighing procedure to determine this basic empty weight and center of gravity location:

(a) Preparation

(1) Be certain that all items checked in the airplane equipment list are installed in the proper location in the airplane.

(2) Remove excessive dirt, grease, moisture, foreign items such as rags and tools from the airplane before weighing.

(3) Defuel airplane. Then open all fuel drains until all remaining fuel is drained. Operate engine on each tank until all undrainable fuel is used and engine stops. Then add the unusable fuel (2.0 gallons total, 1.0 gallons each wing).

6.3 AIRPLANE WEIGHING PROCEDURE (continued)

CAUTION

Whenever the fuel system is completely drained and fuel is replenished it will be necessary to run the engine for a minimum of 3 minutes at 1000 RPM on each tank to ensure no air exists in the fuel supply lines.

(4) Fill with oil to full capacity.

(5) Place front seats in the fourth (4th) notch, aft of forward position. Put flaps in the fully retracted position and all control surfaces in the neutral position. The tow bar should be in the proper location and the door closed.

(6) Weigh the airplane inside a closed building to prevent errors in scale readings due to wind.

(b) Leveling

(1) With airplane on scales, block main gear oleo pistons in the fully extended position.

(2) Level airplane (refer to Figure 6-3) deflating nose wheel tire, to center bubble on level.

(c) Weighing - Airplane Basic Empty Weight

(1) With the airplane level and brakes released, record the weight shown on each scale. Deduct the tare, if any, from each reading. (Refer to Figure 6-1)

Scale Position and Symbol	Scale Reading	Tare	Net Weight
Nose Wheel (N)			
Right Main Wheel (R)			
Left Main Wheel (L)			
Basic Empty Weight, as Weighed (T)			

WEIGHING FORM
Figure 6-1

6.3 AIRPLANE WEIGHING PROCEDURE (continued)

(d) Basic Empty Weight Center of Gravity

(1) The following geometry applies to the PA-28-181 airplane when it is level. Refer to Leveling paragraph 6.3 (b).

(2) The basic empty weight center of gravity (as weighed including optional equipment, full oil and unusable fuel) can be determined by the following formula:

$$\text{C.G. Arm} = \frac{N\,(A) + (R + L)\,(B)}{T} \quad \text{inches}$$

Where: $T = N + R + L$

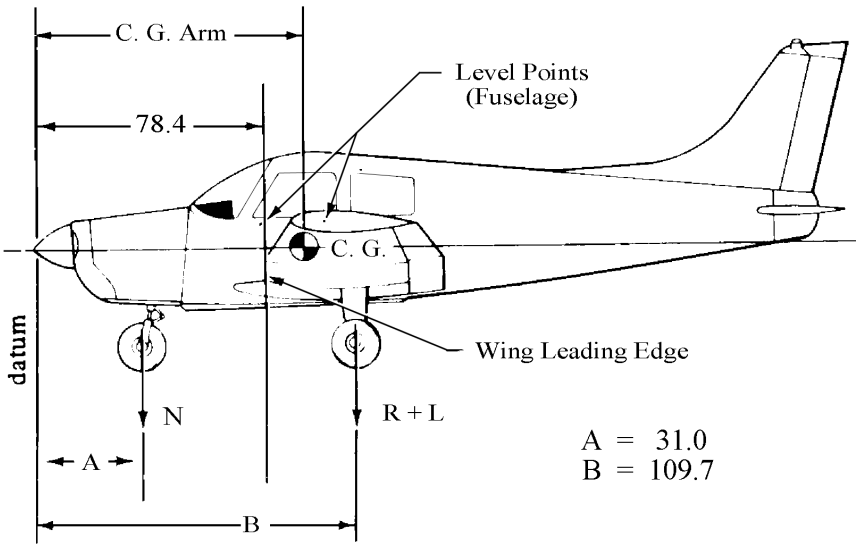

LEVELING DIAGRAM
Figure 6-3

6.5 WEIGHT AND BALANCE DATA AND RECORD

The Basic Empty Weight, Center of Gravity Location and Useful Load listed in Figure 6-5 are for the airplane as certified at the factory. These figures apply only to the specific airplane serial number and registration number shown.

The basic empty weight of the airplane as certified at the factory has been entered in the Weight and Balance Record (Figure 6-7). This form is provided to present the current status of the airplane basic empty weight and a complete history of previous modifications. Any change to the permanently installed equipment or modification which affects weight or moment must be entered in the Weight and Balance Record.

MODEL PA-28-181 PIPER PILOT

Airplane Serial Number _____

Registration Number_____

Date_____

AIRPLANE BASIC EMPTY WEIGHT

Item		Weight (Lbs)	x	C.G. Arm (Inches Aft of Datum)	=	Moment (In-Lbs)
Standard Empty Weight*	Actual Computed					
Optional Equipment						
Basic Empty Weight						

*The standard empty weight includes full oil capacity and 2.0 gallons of unusable fuel.

AIRPLANE USEFUL LOAD

(Ramp Weight) - (Basic Empty Weight) = Useful Load

(2558 lbs) - (lbs) = lbs.

THIS BASIC EMPTY WEIGHT, C.G. AND USEFUL LOAD ARE FOR THE AIRPLANE AS CERTIFIED AT THE FACTORY. REFER TO APPROPRIATE AIRCRAFT RECORD WHEN ALTERATIONS HAVE BEEN MADE.

WEIGHT AND BALANCE DATA FORM
Figure 6-5

PA-28-181	Serial Number	Registration Number				Page Number	
Date	Item No.	Description of Article or Modification	Added (+) Removed (-)	Weight Change			Running Basic Empty Weight	
				Wt. (Lb.)	Arm (In.)	Moment /100	Wt. (Lb.)	Moment /100
		As licensed						

WEIGHT AND BALANCE RECORD
Figure 6-7

PA-28-181	Serial Number		Registration Number				Page Number	
Date	Item No.	Description of Article or Modification	Added (+) Removed (-)	Weight Change			Running Basic Empty Weight	
				Wt. (Lb.)	Arm (In.)	Moment /100	Wt. (Lb.)	Moment /100

WEIGHT AND BALANCE RECORD (cont)
Figure 6-7 (cont)

6.7 WEIGHT AND BALANCE DETERMINATION FOR FLIGHT

(a) Add the weight of all items to be loaded to the basic empty weight.
(b) Use the Loading Graph (Figure 6-13) to determine the moment of all items to be carried in the airplane.
(c) Add the moment of all items to be loaded to the basic empty weight moment.
(d) Divide the total moment by the total weight to determine the C.G. location.
(e) By using the figures of item (a) and item (d) (above), locate a point on the C.G. range and weight graph (Figure 6-15). If the point falls within the C.G. envelope, the loading meets the weight and balance requirements.

	Weight (Lbs)	Arm Aft Datum (Inches)	Moment (In-Lbs)
Basic Empty Weight	1582.0	86.5	136843
Front Seat Occupants	500.0	80.5	40250
Rear Seat Occupant (If Installed)	188.0	118.1	22203
Fuel (48 Gallon Maximum)	288.0	95.0	27360
Ramp Weight	2558.0	88.6	226656
Fuel Allowance For Engine Start, Taxi and Run Up	-8	95.0	-760
Takeoff Weight	2550.0	88.6	225896

The center of gravity (C.G.) of this sample loading problem is at 88.6 inches aft of the datum line. Locate this point (88.6) on the C.G. range and weight graph. Since this point falls within the weight - C.G. envelope, this loading meets the weight and balance requirements.

IT IS THE RESPONSIBILITY OF THE PILOT AND AIRCRAFT OWNER TO ENSURE THAT THE AIRPLANE IS LOADED PROPERLY.

SAMPLE LOADING PROBLEM (NORMAL CATEGORY)
Figure 6-9

	Weight (Lbs)	Arm Aft Datum (Inches)	Moment (In-Lbs)
Basic Empty Weight			
Front Seat Occupants		80.5	
Rear Seat Occupant (If Installed)		118.1	
Fuel (48 Gallon Maximum)		95.0	
Ramp Weight			
Fuel Allowance For Engine Start, Taxi and Run Up	-8	95.0	-760
Takeoff Weight			

Totals must be within approved weight and C.G. limits. It is the responsibility of the airplane owner and the pilot to ensure that the airplane is loaded properly. The Basic Empty Weight C.G. is noted on the Weight and Balance Data Form (Figure 6-5). If the airplane has been altered, refer to the Weight and Balance Record for this information.

WEIGHT AND BALANCE LOADING FORM
Figure 6-11

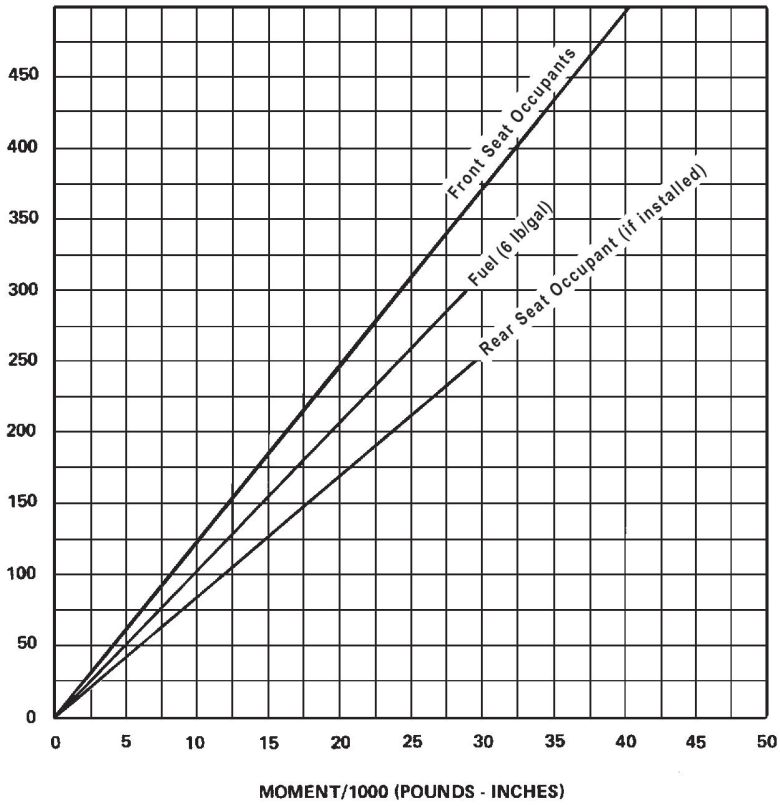

LOADING GRAPH
Figure 6-13

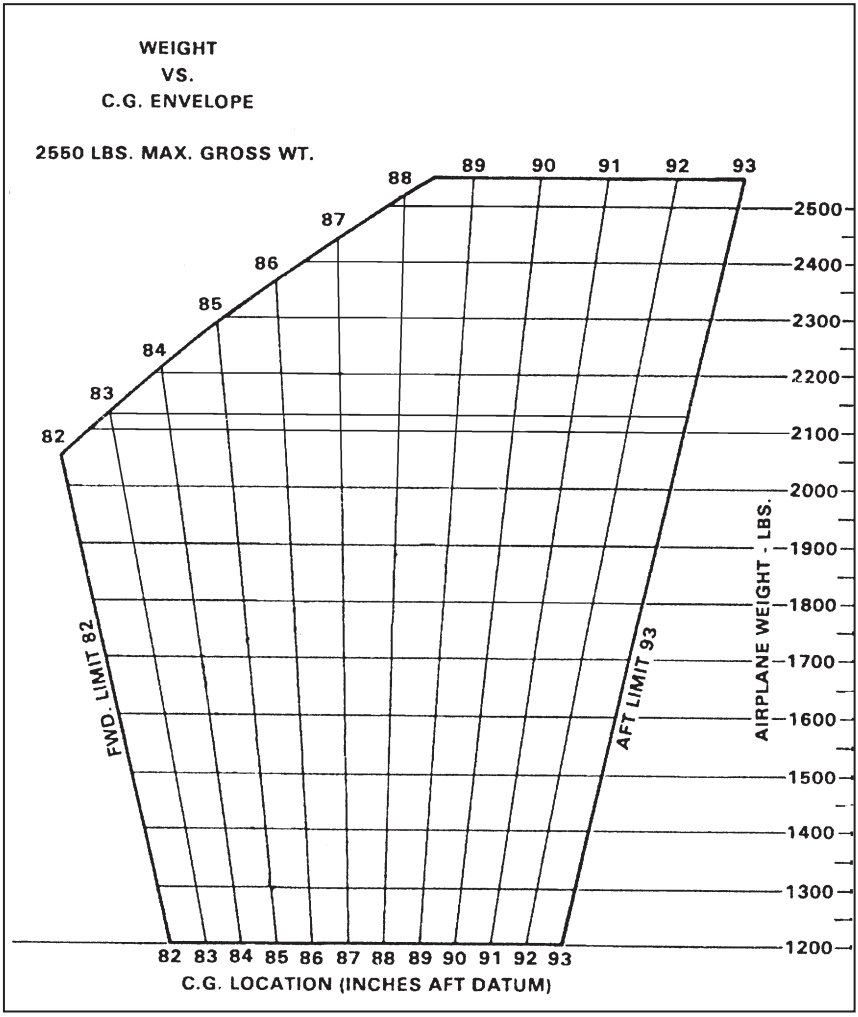

C.G. RANGE AND WEIGHT
Figure 6-15

TABLE OF CONTENTS

SECTION 7

DESCRIPTION AND OPERATION OF THE AIRPLANE AND ITS SYSTEMS

Paragraph No.		Page No.
7.1	The Airplane	7-1
7.3	Airframe	7-1
7.5	Engine and Propeller	7-1
7.7	Induction System	7-2
7.9	Engine Controls	7-3
7.11	Flight Controls	7-5
7.13	Landing Gear	7-6
7.15	Garmin G3X Touch Electronic Flight Instrument System	7-8
	Primary Flight Display	7-9
	Multi-Function Display	7-14
	Autopilot (Optional)	7-20
	GMA 245R Audio Panel	7-25
	GNX 375 GPS Navigator/Transponder	7-25
	GNC 255A VHF Navigation/Communication Radio	7-26
7.17	Standby Instrument	7-28
7.19	Fuel System	7-30
7.21	Electrical System	7-33
7.23	Instrument Panel	7-37
7.25	Pitot-Static System	7-40
7.27	Heating and Ventilating System	7-42
7.29	Cabin Features	7-45
7.31	Stall Warning	7-46
7.33	Finish	7-46
7.35	External Power	7-46
7.37	Emergency Locator Transmitter	7-47

THIS PAGE INTENTIONALLY LEFT BLANK

SECTION 7

DESCRIPTION AND OPERATION OF THE AIRPLANE AND ITS SYSTEMS

7.1 THE AIRPLANE

The PA-28-181 Piper Pilot is a single-engine, low-wing monoplane of all metal construction. It has up to 3-place seating and a 180 horsepower engine.

7.3 AIRFRAME

The basic airframe, except for a tubular steel engine mount, steel landing gear struts, and other miscellaneous steel parts, is of aluminum alloy construction. The wing tips, the cowling, the tail surfaces - are of fiberglass or ABS thermoplastic. Aerobatics are prohibited in this airplane since the structure is not designed for aerobatic loads.

The semi-tapered wings have a laminar flow type NACA 652-415 airfoil. The wings are attached to each side of the fuselage by insertion of the butt ends of the respective main spars into a spar box carry-through which is an integral part of the fuselage structure, providing, in effect, a continuous main spar with splices at each side of the fuselage. There are also fore and aft attachments at the rear spar and at an auxiliary front spar.

7.5 ENGINE AND PROPELLER

The Piper Pilot is powered by a four-cylinder, direct drive, horizontally opposed fuel injected engine rated at 180 horsepower at 2700 rpm. It is furnished with a starter, 70 ampere 28-volt alternator, shielded ignition wires, a fuel pump, and a dry, automotive type induction air filter.

The exhaust system is made entirely from stainless steel and is equipped with a single exhaust tailpipe, which exits out of the lower right side of the engine cowling. Cabin heating is provided by a heater muffler assembly (or heat muff) that is comprised of a stainless steel shroud that surrounds the engine exhaust pipes. Outside air is routed through the heat muff and is ducted into the cabin, providing warm air for cabin heating and windshield defrosting.

The fixed-pitch propeller is made from a one-piece alloy forging.

7.7 INDUCTION SYSTEM

The induction system incorporates a fuel injection/injector servo. The injector is based on the principle of differential pressure, which balances air pressure against fuel pressure. The regulated fuel pressure established by the servo valve when applied across a fuel control (jetting system) makes the fuel flow proportional to airflow. Fuel pressure regulation by the servo valve causes a minimal drop in fuel pressure throughout the metering system. Metering pressure is maintained above most vapor forming conditions while fuel inlet pressure is low enough to allow use of a diaphragm pump. The servo system feature also checks vapor lock and associated starting problems.

The fuel injection servo meters fuel flow proportionally with airflow and maintains the mixture as manually set for all engine speeds. The fuel flow divider receives metered fuel and distributes fuel to each cylinder fuel nozzle.

The induction airbox assembly contains a valve that can open and allow airflow into the engine in the event of blockage of the primary induction air source. The air provided through the alternate air source is heated, which will also provide induction system icing protection. As this alternate air source is not filtered, the primary air source should always be used for takeoff.

Control of the alternate air valve is through a lever located to the right of the engine control lever quadrant labeled “ALT. AIR”.

The pilot should read and follow the procedures recommended in the engine Operator’s Manual for this engine, in order to obtain maximum engine efficiency and time between engine overhauls.

7.9 ENGINE CONTROLS

Engine controls consist of a throttle control and a mixture control lever. These controls are located on the control quadrant on the lower center of the instrument panel (Figure 7-1) accessible by the pilot and the copilot. The control cables are teflon-lined to reduce friction and binding.

The throttle lever is used to adjust engine RPM. The mixture control lever is used to adjust the air to fuel ratio. The engine is shut down by the placing the mixture control lever in the full lean position. See Section 4 of this handbook for proper leaning procedure.

The friction on the throttle and mixture controls can be adjusted by using the friction adjustment lever on the right side of the control quadrant.

An alternate air control (ALT. AIR) is located on the instrument panel right of the control quadrant. The control displays two positions: Open (down), Closed (up).

7.9 ENGINE CONTROLS (continued)

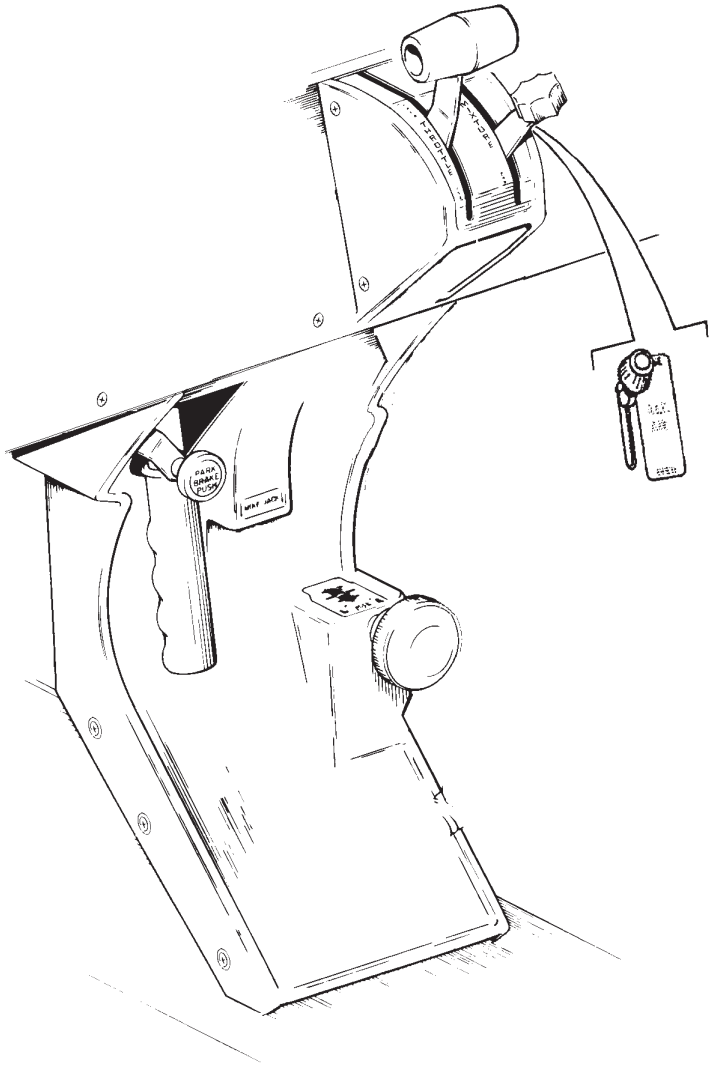

CONTROL QUADRANT AND CONSOLE
Figure 7-1

7.11 FLIGHT CONTROLS

Dual controls are provided as standard equipment, with a cable system used between the controls and the surfaces. The horizontal tail (stabilator) is of the all-movable slab type with a trim tab mounted on the trailing edge of the stabilator to reduce the control system forces. This tab is actuated by a control wheel on the floor between the front seats (Figure 7-3).

A rudder trim adjustment is mounted on the right side of the pedestal below the throttle quadrant and permits directional trim as needed in flight (refer to Figure 7-1).

The flaps are manually operated and spring-loaded to return to the up position. A past-center lock incorporated in the actuating linkage holds the flap when it is in the up position so that it may be used as a step on the right side. The flap will only support a step load in the full up position. The flaps have three extended positions, 10, 25 and 40 degrees.

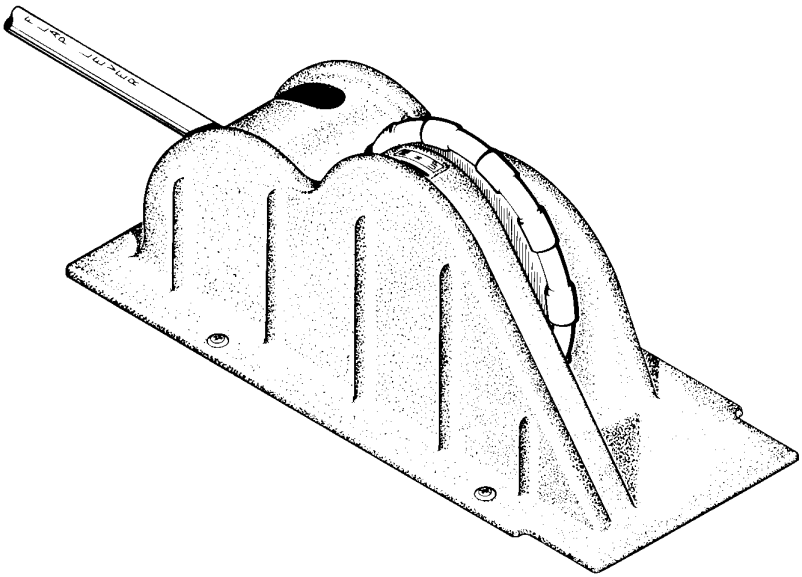

FLIGHT CONTROL CONSOLE
Figure 7-3

7.13 LANDING GEAR

Three landing gear use Parker 6.00 x 6 wheels. Each main gear is equipped with a single hydraulically operated external caliper & disc brake assembly. All three wheels use 6.00 x 6, four-ply rating, Type III tires with tubes.

A spring device is incorporated in the rudder pedal torque tube assembly to provide rudder trim. By using the rudder pedals and brakes, the nose gear is steerable through a 20 degree arc each side of center. A shimmy dampener is also included in the nose gear.

The three struts are of the air-oil type, with a normal extension of 3.25 inches for the nose gear and 4.50 inches for the main gear.

The brake system consists of dual toe brakes attached to the rudder pedals and a hand brake lever located below, behind, and to the left of the throttle quadrant. The toe and hand brakes have their own master brake cylinders, but they share a common reservoir. The brake fluid reservoir is installed on the top left front face of the firewall. The parking brake incorporates a dedicated master cylinder which supplies hydraulic pressure to each main wheel brake assembly shown in Figure 7-5. To actuate the parking brake, pull back on the brake lever, depress the knob attached to the left side of the handle, then release the handle. To release the parking brake, pull back on the hand brake lever to disengage the catch mechanism and allow the handle to swing forward (refer to Figure 7-1).

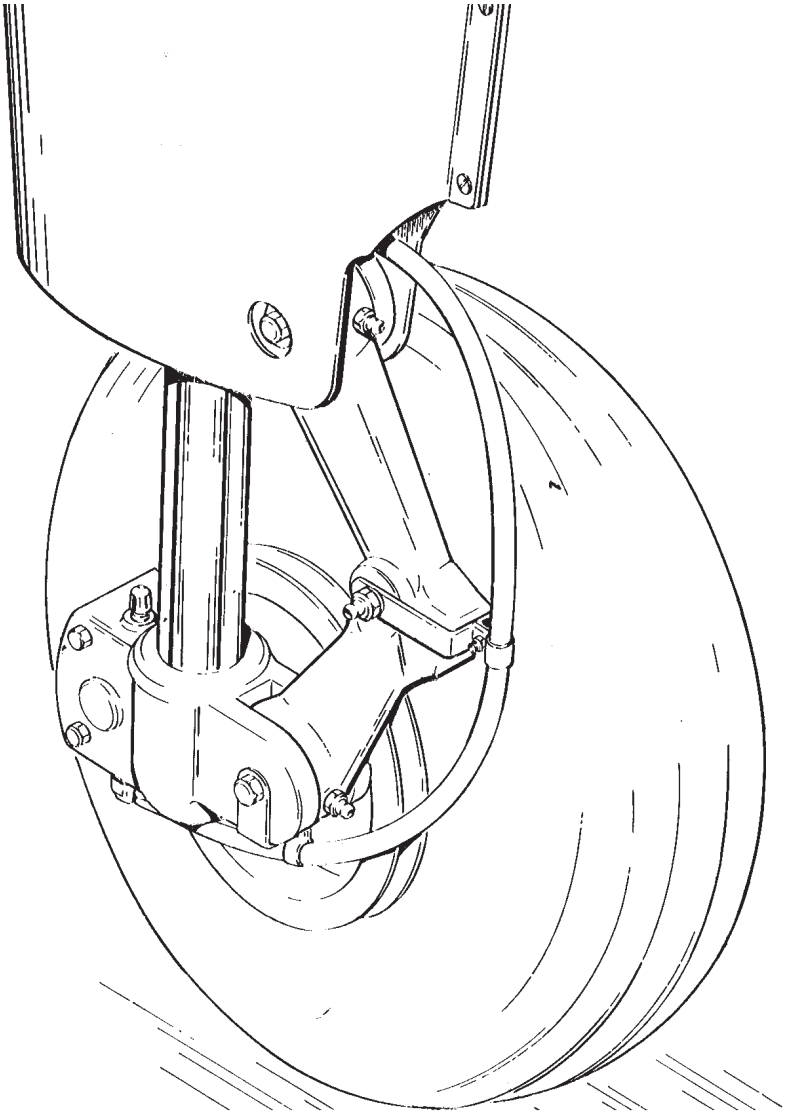

MAIN WHEEL ASSEMBLY
Figure 7-5

7.15 GARMIN G3X TOUCH ELECTRONIC FLIGHT INSTRUMENT SYSTEM

NOTE

The G3X Touch Pilot's Guide for Certified Aircraft, P/N 190-02472-00 (latest appropriate revision), contains additional information regarding G3X Touch system description, control, and function. The pilot should be familiar with the applicable information contained in the Pilot's Guide.

NOTE

See Section 1.21 for navigation system equipment approvals and Section 2.25 for navigation system limitations.

The Garmin G3X Touch Electronic Flight Instrument System (EFIS) consists of a single 10.6 inch display unit which performs the following functions:

- Display of PFD information
- Display of engine and airframe parameters, including a dedicated Engine Page
- Display of MFD information (when in split screen mode)
- Display of MFD moving map, Charts, SafeTaxi, Terrain, Obstacle, Datalink Traffic, Datalink Weather, flight plan and navigation information from an external Garmin GPS navigator and external VOR/ILS Nav radio
- Control and display of transponder and communications radios
- Wireless Bluetooth® transceiver that communicates with tablet computers and other Garmin devices that support Connext interface protocol

7.15 GARMIN G3X TOUCH ELECTRONIC FLIGHT INSTRUMENT SYSTEM (continued)

Primary Flight Display

The Primary Flight Display (PFD) displays airspeed, attitude, altitude, vertical speed, and heading information in a traditional format. Slip/skid information is presented below the attitude indicator as a traditional inclinometer. When the white ball is between the two scribe lines, no slip or skid is present. Rate of turn information is shown on the scale above the rotating compass card; a standard rate turn is accomplished when the turn rate trend vector stops at the second tick mark (standard rate tick mark). A timer, clock, and outside air temperature (OAT) are presented in the PFD status bar at the bottom of the PFD. The measured value of OAT is adjusted for probe recovery factor and ram air effects to indicate static air temperature.

The primary function of the PFD is to display information received from the Air Data Attitude and Heading Reference System (ADAHRS) along with lateral and vertical course deviations, barometric pressure setting, and bugs for altitude, airspeed, and vertical speed. Multiple annunciations, including navigation source, flight phase, and cross track error, are presented adjacent to the course pointer on the HSI. Along the top of the PFD are displays of Com and Nav frequencies, flight director mode annunciations, pilot-selectable data fields, and a Full/Split screen indicator. On the lower right side of the PFD is the CAS Message Window. The PFD also incorporates features that increase situational awareness, such as Synthetic Vision, Pathways, and a Flight Path Marker.

NOTE

The Garmin G3X internal GPS navigation source cannot be used for navigation in Instrument Flight Rules (IFR). See Section 2 - Limitations for complete details.

Primary Flight Display (continued)

For IFR operations using GPS course guidance, a valid external GPS navigation source is required, such as the GNX 375 GPS Navigator/Transponder. The following are indications of a loss of approved IFR GPS guidance and IFR operations should be terminated as soon as practical if GPS course guidance is the only source available.

- If GPS navigation data is invalid or unavailable, a yellow REV and VFR annunciation will appear on the HSI of the PFD indicating that the external navigation source has failed and the system has automatically reverted to internal VFR GPS for navigation.
- If the external GPS navigator is functioning properly but is supplying inadequate scaling information to the CDI on the PFD, a yellow VFR annunciation will appear by itself on the HSI and the CDI on the G5 standby instrument is removed. The CDI on the GNX 375 has valid scaling but should not be used for IFR operations.

NOTE

IFR operations are allowed if a valid VHF Navigation source is available and ground stations are within range.

NOTE

If the external GPS navigation source is available/ valid but the pilot has elected to use the internal GPS navigation source in VFR conditions, a cyan INT annunciation and magenta VFR annunciation will be displayed on the HSI.

Primary Flight Display (continued)

Air Data Attitude and Heading Reference System (ADAHRS)

The Air Data Attitude and Heading Reference System (ADAHRS) combines functions of the Air Data Computer (ADC) and the Attitude and Heading Reference System (AHRS).

Attitude and Heading Reference System (AHRS)

The AHRS component of the ADAHRS uses GPS, rate sensors, air data, and magnetic variation to provide pitch and roll attitude, sideslip and heading to the display system. The AHRS incorporates internal monitors to determine validity of its parameters. If a parameter is determined invalid by the internal monitors, a Red-X is displayed over the invalid parameter. If the AHRS becomes invalid, a Red-X and amber ATTITUDE FAIL will be displayed on the attitude display. After a brief delay, the G3X will automatically display attitude information from the G5 standby instrument. The G3X and G5 standby heading will be inoperative requiring the pilot to use the non-stabilized magnetic compass. See Section 3.1 for additional information concerning PFD alerts.

If an amber AHRS ALIGN or ALIGNING KEEP WINGS LEVEL annunciation is displayed, the AHRS is operating in a degraded mode. The AHRS will align while the aircraft is in motion, but will align quicker if the wings are kept level during the alignment process.

Air Data Computer (ADC)

The ADC component of the ADAHRS provides airspeed, altitude, vertical speed, and air temperature to the display system. In addition to the primary displays, this information is used by the FMS and Traffic systems.

The ADC incorporates internal monitors to determine validity of its parameters. If a parameter is determined invalid by the internal monitors, a Red-X is displayed over the invalid parameter. If the ADC becomes invalid, a Red-X and amber AIRSPEED FAIL and ALTITUDE FAIL will be displayed on the appropriate display. After a brief delay, the G3X will automatically display altitude, and airspeed information from the G5 standby instrument. See Section 3.1 for additional information concerning PFD alerts.

Primary Flight Display (continued)

Synthetic Vision - (SVX)

Synthetic Vision (SVX) is a visual enhancement to the G3X Touch. Synthetic Vision information is displayed on the PFD as a forward-looking depiction of the topography (terrain contours with grid lines, large water features, and obstacles over 200 feet AGL) immediately in front of the aircraft. The depicted imagery is derived from the aircraft attitude, heading, GPS three-dimensional position, and a database of terrain, obstacles, and other relevant features. The following SVX enhancements appear on the PFD:

- Pathways
- Flight Path Marker
- Traffic Display
- Airport Signs
- Runway Display
- Terrain Alerting
- Obstacle Alerting
- Zero-Pitch Line

Primary Flight Display (continued)

Crew Alerting System (CAS) Messages

The Crew Alerting System (CAS) consists of a CAS message window on the lower right side of the PFD where all CAS text messages appear. Touching an active CAS message will acknowledge it. The severity of CAS messages are categorized as Warning, Caution, and Advisory as follows:

Red Warning Messages

NOTE

The flashing and single chime are inhibited if the CAS message is triggered when the aircraft is on the ground and the engine speed is less than 1500 RPM.

Warning CAS messages are red messages that will flash until acknowledged. To acknowledge the CAS message, touch the on-screen message or press the BACK key. Warning CAS messages are accompanied by a single chime and will persist until the initiating condition is removed. Parameters in the EIS window that do not have an associated CAS text message will flash until the condition is removed.

Amber Caution Messages

Caution CAS messages are amber messages that are not acknowledgeable. Caution CAS messages will persist until the initiating condition is removed. Parameters in the EIS window that do not have an associated CAS text message will remain steady amber until the condition is removed.

White Advisory Messages

Advisory CAS messages are white messages that are not acknowledgeable. Advisory CAS messages will persist until the initiating condition is removed.

Multi-Function Display

The Multi-Function Display (MFD) is located adjacent to the PFD whenever the display is in split screen mode. The MFD incorporates the following main pages along with their associated subfunctions:

- Map - Navigation Map
- Cht - Enroute Charts
- Wpt - Waypoint
- FPL - Active Flight Plan
- Wx - Weather
- Ter - Terrain
- Trf - Traffic (via ADS-B In)
- Info - Information
- Eng - Engine

NOTE

User waypoints created on the GNX 375 will be truncated to five characters when displayed on the G3X maps. To avoid waypoints appearing as duplicates, limit the length to five characters.

Multi-Function Display (continued)

Weather

WARNING

Do not use data link weather information for maneuvering in, near, or around areas of hazardous weather. Information contained within data link weather products may not accurately depict current weather conditions.

NOTE

Weather products displayed on the MFD may not have a time stamp until the image is constructed in its entirety.

Flight Information Service-Broadcast (FIS-B) weather is available for display on the G3X Touch display. No pilot action is required to receive FIS-B weather data, however, the aircraft must be within range and line-of-sight of an operating ground based transceiver. FIS-B weather products include METARs, TAFs, NEXRAD (Regional and CONUS (Combined)), AIRMETS, SIGMETs, PIREPs, and Winds and Temperatures Aloft.

FIS-B weather is received via the ADS-B In enabled GNX 375 Transponder/ Navigator. Weather product status can be viewed on the dedicated Weather Page or Data Link Page from the Tools menu. If more than half of the expiration time has elapsed, the color of the product age displayed changes to yellow. If the weather data are not refreshed within the expiration time requirements, the data are considered expired and are removed from the display.

Multi-Function Display (continued)

Terrain

WARNING

Do not use Terrain information for primary terrain avoidance. Terrain information is intended only to enhance situational awareness.

NOTE

Maneuvers and navigation must not be based solely on the display of terrain or obstacles on the moving map terrain displays.
Terrain alerts must be inhibited when landing at an airport that is not in the airport database.

The Terrain Page displays altitudes of terrain and obstructions relative to the aircraft position. A valid 3-D GPS position and a valid terrain and obstacle database are required as terrain and obstacle proximity is based on the aircraft's GPS altitude relative to that of the terrain or obstacle. GPS position and GPS-MSL altitude are then used to calculate and predict the aircraft's flight path in relation to the surrounding terrain and obstacles.

Terrain information is displayed on the dedicated Terrain Page (Map View and Profile View), on the Terrain Alert Windows, and on the PFD when Synthetic Vision is enabled. Terrain Alert windows appear on all pages, except the dedicated Terrain Page, to inform the pilot of proximity to the terrain and obstacles, as well as an unsafe descent rate. These alerts depend on user-defined parameters in the Terrain Page setup. Terrain is integrated with Synthetic Vision to provide land contours (colors are consistent with those of the topographical map display), large water features, towers, obstacles over 200 feet AGL, as well as visual and audio alerts to indicate the presence of terrain and obstacle threats relevant to the projected flight path. Terrain and obstacles are shaded red when they are above the aircraft or within 100 feet below the aircraft and shaded yellow when between 100 and 1,000 feet below the aircraft. The lower altitude of the yellow range defaults to 1,000 feet, however, it is user selectable. The projected point of impact with terrain is marked with an "X" symbol. Black areas depict the aircraft altitude is above the caution elevation.

Multi-Function Display (continued)

Terrain (continued)

Obstacle information is shown on the Terrain Page whenever the map range is set to 12 nm or below. Obstacles are also shown on the Map Page when the map range is set to 3 nm or below. Lighted and unlighted obstacles taller than 200 feet AGL are shown.

Traffic

NOTE

The display of traffic is an aid to visual acquisition and may not be utilized for aircraft maneuvering.

The Traffic system provides a display of surrounding traffic relative to the aircraft position. Visual and aural alerts are provided when the offending traffic are predicted to be within a specified volume of airspace around your aircraft in a specified amount of time. System status is displayed in the upper right corner of the Map Page as well as the lower left corner of the dedicated Traffic Page.

Traffic information is provided by the panel-mounted GPS Navigator and ADS-B Transponder. Traffic information is displayed on the Map Page, the dedicated Traffic Page, the Traffic Warning Window (Inset Map), and on the PFD when Synthetic Vision is enabled.

Although the system collects traffic information from various sources, it prioritizes what is being displayed. The current traffic source is annunciated in the upper left corner of the Traffic Page (Trf). When a traffic advisory (TA) is detected, the Traffic Warning Window (Inset Map) automatically appears on the PFD, a flashing black-on-yellow “TRAFFIC” annunciation appears near the attitude indicator, and a single “Traffic” voice alert is generated.

Multi-Function Display (continued)

Engine Page

The MFD incorporates a dedicated Engine Page as shown in Figure 7-7. The Engine Page has a different layout than the EIS window but incorporates the same information.

ENGINE PAGE (TYPICAL)
Figure 7-7

A leaning function assists the pilot in leaning the engine for best power or best fuel economy. To initiate the leaning function, touch the Lean Assist button on the Main tab of the Engine Page and proceed to lean the engine's fuel mixture. Best Economy is achieved when the engine is operating at peak EGT of the leanest cylinder (first cylinder to peak), as recommended by the engine manufacturer. Best Power is achieved when the engine is leaned until the first cylinder reaches peak EGT, then enrichened until that EGT is 100°F rich of the peak value.

Multi-Function Display (continued)

Engine Page (continued)

The Lean Assist function detects a cylinder's peak EGT whenever the temperature reaches a peak value then decreases by 7°F. When this occurs, the bar changes from green to blue and the white EGT value changes to a blue delta number, indicating the delta/difference between the current EGT and the peak EGT. The first cylinder to peak is identified with a solid blue box around the delta number, while the grey number at the top of the bar indicates the peak value.

Databases

WARNING

Do not use outdated database information. Databases used in the G3X Touch system must be updated regularly in order to ensure that the information remains current. Pilots using any outdated database do so entirely at their own risk.

The G3X Touch system utilizes several databases. The current database information is displayed during power-up, including valid operating dates, cycle number, and database type. Database titles and dates that appear in yellow have expired or are in question.

Autopilot (Optional)

NOTE

The G3X Touch Pilot's Guide for Certified Aircraft, P/N 190-02472-00 (latest appropriate revision), and the G5 Electronic Flight Instrument Pilot's Guide for Certified Aircraft, P/N 190-01112-12 (latest appropriate revision) contain additional information regarding GFC 500 system description, control, and function. The pilot should be familiar with the applicable information contained in the Pilot's Guides.

The GFC 500 is a digital Automatic Flight Control System (AFCS), consisting of a two-axis autopilot and flight director. The G3X electronic flight instrument system provides attitude, rate, and acceleration information directly to the pitch and roll servos, while indicated airspeed, vertical speed, pressure altitude, and GPS information are provided to the autopilot mode controller.

NOTE

The yaw damper button on the autopilot mode controller is inoperative.

Flight director modes are selected by the pilot on the autopilot mode controller located in the center of the instrument panel. Autopilot status, flight director status, the blue Level Mode (LVL), and the non-functional yaw damper buttons are located in the central portion of the mode controller. Lateral flight director mode buttons are located on the left side of the mode controller, while vertical mode control buttons, including the UP/DN thumb wheel are located on the right side. A small triangular light illuminates above each active button. The active and armed flight director modes are displayed in the Autopilot Status Box along the top of the G3X Touch display and on the G5 standby instrument.

Autopilot control can also be accessed by touching the Autopilot Status Box on the G3X Touch display. Softkeys for system activation/deactivation (including Electronic Stability and Protection and Level Mode) and flight director mode selection are arranged in an intuitive vertical fashion. A green light bar illuminates below each active softkey.

Autopilot (Optional) (continued)

AUTOPILOT OPERATION

When the BATTERY MASTER switch is selected ON, the GFC 500 automatically conducts a self-test, as indicated by a white-boxed PFT annunciation on the G3X Touch display and the G5 standby instrument. The PFT annunciation is removed at the completion of the preflight test. If the autopilot fails the preflight test, a yellow AP with Red-X is displayed in the autopilot status box on the G3X Touch display and on the G5 standby instrument.

The autopilot can be manually engaged by pressing the AP button on the mode controller or the AP softkey on the G3X Touch display. The autopilot can be disconnected by various normal and abnormal means. Normal and abnormal disconnects are indicated by a flashing red or yellow AP annunciation, respectively, in the Autopilot Status Box on the G3X Touch display and G5 standby instrument.

Normal autopilot disconnect methods include:

- Pressing the A/P DISC / TRIM INTER button on the control wheel
- Activation of both halves of the manual electric pitch trim switch on the control wheel
- Pressing the AP key on the autopilot mode controller or G3X Touch display

Abnormal autopilot disconnect methods include:

- Pulling the AUTOPILOT circuit breaker

After normal autopilot disengagements, the aural disconnect tone will silence automatically after a few seconds. After abnormal autopilot disengagements, the aural disconnect tone will play continuously until being silenced by touching the red A/P annunciation on the PFD.

Autopilot (Optional) (continued)

AUTOPILOT FEATURES

The following features are available whenever the optional autopilot is installed.

Overspeed Protection

Overspeed Protection attempts to prevent the aircraft from exceeding the maximum approved autopilot operating speed by providing a flight director pitch up command whenever the airspeed exceeds 140 KIAS. If flying manually, the pilot may follow the pitch up commands, or if engaged, the autopilot will follow the command. The pitch up command will not exceed that for level flight. When Overspeed Protection is active, an amber MAX SPEED annunciation will be displayed above the airspeed tape and an AIRSPEED.. AIRSPEED voice alert will sound. Overspeed Protection is not active in ALT or GS modes and the airspeed reference (IAS) cannot be adjusted while in Overspeed Protection mode. Recovery from the overspeed condition should be conducted per the Autopilot Overspeed Recovery checklist in Section 3.

Takeoff Mode

Takeoff Mode allows the pilot to manually follow the flight director command bars after takeoff rotation. Takeoff Mode is activated by pressing the TO/GA switch on the throttle lever while on the ground. Whenever Takeoff Mode is active, “TO” will be displayed as the lateral and vertical modes in the AFCS status box and the flight director will display wings level and 7° nose up pitch attitude.

Go-Around Mode

Go-Around Mode allows the pilot to manually follow the flight director command bars during a go-around maneuver. Go-Around Mode is activated by pressing the TO/GA switch on the throttle lever while in flight. Whenever Go-Around Mode is active the flight director will display wings level and 7.5° nose up pitch attitude, “GA” will be displayed as the lateral and vertical modes in the AFCS status box. During a coupled go-around the autopilot remains engaged and the pilot must add power and reduce drag according to the Autopilot Go-Around checklist in Section 4.

Autopilot (Optional) (continued)

AUTOPILOT FEATURES (continued)

Underspeed Protection

Underspeed Protection (USP) is a flight director function that provides low speed awareness and prevents the airplane from operating below the minimum approved autopilot operating speed. When that speed is reached, an amber MIN SPEED annunciation will be displayed above the airspeed tape, an AIRSPEED..AIRSPEED voice alert will sound, and the autopilot will lower the nose to maintain the speed. Recovery from the underspeed condition should be conducted per the Autopilot Underspeed Recovery checklist in Section 3.

Level Mode

WARNING

Do not press the LVL switch if an autopilot or pitch trim malfunction is suspected.

Level Mode commands the airplane to wings level and zero vertical speed. It is activated by pressing the blue switch (labeled LVL) on the autopilot mode controller or by selecting LVL on the AFCS page of the G3X Touch display. Level Mode may be activated at anytime with the autopilot engaged or disengaged but should not be used if the autopilot is operating in any failure condition. Level Mode will activate automatically if Electronic Stability and Protection is engaged for more than 10 seconds in any 20 second interval. Activation is indicated by green LVL and LVL for lateral and vertical modes, respectively.

Autopilot (Optional) (continued)

AUTOPILOT FEATURES (continued)

Electronic Stability and Protection

Electronic Stability and Protection (ESP) provides a control force feedback to deter the pilot from operating outside a defined envelope. ESP functions only when the autopilot is operable, but is disengaged. As the aircraft exceeds the operating limits shown below, the autopilot servos automatically engage to nudge the aircraft back to the nominal operating envelope.

- Pitch attitude +20°, -15°
- Roll attitude 45° left or right
- Airspeed greater than V_{NE}
- Airspeed less than ~55 knots

The pilot can easily overpower the restoring tendency, and may interrupt ESP with the A/P DISC button. If ESP is active for more than 10 seconds in any 20 second time period, the autopilot will engage and the voice alert "Engaging Autopilot" will sound indicating activation of Level Mode. At any time (usually for training reasons), the ESP function may be disabled by deselecting ESP on the AFCS page of the G3X Touch display. The status of ESP (enabled or disabled) after each electrical power cycle is preset at the time of aircraft delivery but may be changed by authorized maintenance personnel if desired. If this preset status is not desired, the pilot should change it prior to flight (touch Autopilot Status Box, then ESP button). If enabled, ESP will automatically arm when the aircraft is above 500 feet AGL and the autopilot is not engaged, and disarm when below 200 feet AGL.

NOTE

The ESP resistive forces may be difficult to detect in situations where stall buffet/stall speed are close to 55 knots.

Expanded Engagement Envelope (Optional)

Expanded engagement envelope allows autopilot engagement up to the pitch and roll attitudes shown in the GFC 500 Automatic Flight Control System (AFCS) limitations of Section 2. If the autopilot is engaged at a pitch or roll attitude within the expanded engagement envelope but beyond the maximum autopilot command limits, the airplane will be pitched or rolled to the maximum autopilot command limits.

GMA 245R Audio Panel

The GMA 245R Audio Panel provides audio selector functions of microphone, receiver audio selection, intercom system, speaker/alert output and Bluetooth® audio connectivity for onscreen control on the G3X Touch display. The GMA 245R is installed remotely behind the instrument panel.

GNX 375 GPS Navigator/Transponder

NOTE

The GPS 175/GNC 355/GNX 375 Pilot's Guide, P/N 190-02488-01 (latest appropriate revision), contains additional information regarding GNX 375 system description, control, and function. The pilot should be familiar with the applicable information contained in the Pilot's Guide.

The GNX 375 is a panel-mounted GPS Navigator, with a Satellite Based Augmentation System (SBAS), and built-in Mode S transponder capable of receiving ADS-B In data (ADS-B and ADS-R) and transmitting ADS-B Out data on 1090 Extended Squitter (1090 MHz). The unit also receives ADS-B In data (ADS-B, ADS-R, TIS-B, and FIS-B) on UAT (978 MHz). The unit is equipped with IDENT capability to initiate the SPI (special position identification) pulse for 18 seconds and will reply to ATC Mode A, Mode C, and Mode S All-Call interrogations.

Flight plans, approach procedures, and departure procedures are typically entered into the GNX 375 for viewing on the MFD and GNX displays. When set to Internal GPS, flight plans can be entered directly into the MFD, but will not automatically transfer to the GNX 375.

NOTE

User waypoints created on the GNX 375 will be truncated to five characters when displayed on the G3X maps. To avoid waypoints appearing as duplicates, limit the length to five characters.

GNC 255A VHF Navigation/Communication Radio

NOTE

The GNC 255A/255B Pilot's Guide, P/N 190-01182-01 (latest appropriate revision), contains additional information regarding GNC 255A system description, control, and function. The pilot should be familiar with the information contained in this section and the applicable information contained in the Pilot's Guide.

GNC 255A
Figure 7-9

The GNC 255A is a panel-mounted VHF Nav/Com radio. In addition to the traditional Nav/Com features, the GNC 255A also incorporates functions such as automatic decoding of the Morse code station identifier for VOR/LOC, most-used frequency storage in memory, and a built-in course deviation indicator. Circuit protection for the GNC 255A Nav/Com unit is provided by the COM 1 circuit breaker located on the circuit breaker panel, Row 1, Col. 6 and the NAV circuit breaker located on the circuit breaker panel, Row 1, Col. 5.

GNC 255A Nav/Com Operation

Power/Com Volume/Squelch knob, located in the upper left corner of the bezel, controls audio volume for the Com radio. The GNC 255A Nav/Com will power on with the application of aircraft power and power down when aircraft power is removed during aircraft shutdown. If there is a desire to manually power the unit on/off, turn the knob clockwise (ON) or counterclockwise (OFF) past the detent. Press the knob to toggle automatic squelch On/Off for the Com radio. When automatic squelch is overridden, an “SQ” indicator appears in the upper left corner of the display.

Nav Volume/ID knob, located in the lower left corner of the bezel, controls audio volume for the Nav radio. Press the knob and the Morse code tones will be heard. When Morse code tone is active, “ID” will appear to the left of the active Nav frequency.

Tune knob, located in the lower right corner of the bezel, consists of a outer and inner knob used for tuning frequencies and data entry.

MON key, located to the left of the display, is used to monitor the standby frequency while still listening to the active frequency.

C/N key, located on the lower bezel, selects the Com or Nav radio mode.

OBS key, located on the lower bezel, is used to see the current OBS setting and graphic CDI.

T/F key, located on the lower bezel, is used to toggle between the bearing TO or radial FROM the active VOR. The T/F page also shows Distance/Speed/Time to the active navigation facility.

FUNC key, located on the lower bezel, is used to enter or exit the Function mode. Function categories that can be accessed are Com Radio, Nav Radio, ICS Configuration, System Configuration, and Timer.

CLR key, located on the lower bezel, is used to erase information, cancel entries, or reset timers.

ENT key, located on the lower bezel, is used to save selected values, confirm prompts, and save standby frequencies.

Frequency Transfer (flip/flop) key, located to the right of the display, is used to switch/toggle between the active (left-most) and standby (right-most) frequencies. New frequencies are first selected as a standby frequency, then toggled to the active side with the flip/flop key. Pressing and holding the flip/flop key for approximately two seconds will insert the emergency channel/frequency 121.500 MHz into the active frequency position and move the previous active frequency to the standby position.

USB Port, located under the flip-cover in the upper right corner of the bezel, is used to update the frequency database. To load databases, insert the cable into the USB port of the unit, insert the USB flash drive into the other end of the cable, press the FUNC key, turn the outer knob to SYS CONFIGURATION, turn the inner knob to LOAD DATABASE, then press the ENT key. Verify the correct database version on the flash drive, then press ENT to begin the update. After the database updating process is complete, verify the correct database is loaded onto the unit.

7.17 STANDBY INSTRUMENT

NOTE

The G5 Electronic Flight Instrument Pilot's Guide for Certified Aircraft, P/N 190-01112-12 (latest appropriate revision), contains additional information regarding G5 Electronic Flight Instrument system description, control, and function. The pilot should be familiar with the applicable information contained in the Pilot's Guide.

The Garmin G5 Electronic Flight Instrument, being used as a standby instrument in the Piper Pilot, contains integrated attitude and air data sensors for display of attitude, barometric altitude, airspeed, heading, vertical speed, slip/skid and rate of turn indications. The purpose of the standby flight instrument is to provide a reference for crosschecking against the G3X Touch system and to display basic flight information during a G3X Touch display system failure.

The G5 standby instrument receives GPS position and navigation information from the GNX 375 GPS Navigator, and VOR/LOC/GS information from the GNC 255A Nav/Com, thereby allowing it to provide backup CDI course guidance to the PFD. Should the G3X ADAHRS fail, the ADAHRS within the G5 standby instrument can provide the PFD with backup air data and attitude information for display and autopilot operations.

The standby instrument is located at the top-center of the instrument panel in direct view of the pilot. The instrument will power on with the application of aircraft power and will power down with the removal of aircraft power during aircraft shutdown. If there is a desire to power down the G5 standby instrument without removing aircraft power, press and hold the power button. If the alternator fails, the standby instrument will continue to operate on the essential bus (aircraft power) for 30 minutes, allowing the pilot time to locate a suitable landing location. When the primary battery can no longer supply sufficient voltage to the essential bus, the standby instrument will revert to using its internal battery for up to four additional hours. In this occurrence, the Garmin G5 standby instrument will display a battery status indicator showing battery endurance in hours and minutes. Circuit protection for the G5 standby instrument is provided by the STBY INSTR circuit breaker located on the circuit breaker panel, Row 1, Col. 9.

NOTE

Heading information is not available when operating on the G5's internal battery. The standby wet compass should be used for magnetic heading information.

NOTE

The standby instrument must be checked for proper operation prior to flight. IFR flight is prohibited when any component of the standby instrument is inoperative.

7.19 FUEL SYSTEM

Two twenty-five gallon (24 gallons usable) fuel tanks are secured as the leading edge of each wing by screws and nut plates. Each tank contains an indicator tab in the filler neck to determine fuel status. 17 gallons of usable fuel is measured at the bottom of each indicator tab.

The minimum fuel grade is 100 or 100LL. There is one float type fuel sensor in each wing. The signal corresponding to the position of the floats is sent to the Garmin Engine Airframe (GEA) interface unit where it is converted into fuel quantity. The fuel quantity information is then sent to the MFD for display.

After power-up of the avionics system from the Eng page, select the Fuel Calc tab and enter the Fuel Remaining and/or Fuel Used. Entering the Fuel Remaining is required to make calculated parameters such as range, economy, endurance, fuel over destination (FOD) and the fuel range ring accurate.

The fuel selector control contains three positions: “OFF”, “L” (left tank), and “R” (right tank). To turn the fuel off, rotate selector handle counter-clockwise to the “OFF” position while depressing the button. Rotate the selector handle clockwise to either “L” or “R” positions to permit fuel flow. The button will release automatically preventing accidental selection to the off position.

An auxiliary electric fuel pump is provided in case of failure of the engine driven pump. The electric pump should be on for all takeoffs and landings, and when switching tanks. The pump switch is located in the switch panel to the left of the throttle quadrant.

The fuel drain is provided at the lowest, inboard corner of each wing tank. An engine fuel strainer is accessible through the exterior, lower, left nose section. Each fuel drain and strainer should be opened and the fuel checked for contamination prior to the first flight of the day or after each refueling. Refer to paragraph 8.21e for fuel draining procedure.

7.19 FUEL SYSTEM (continued)

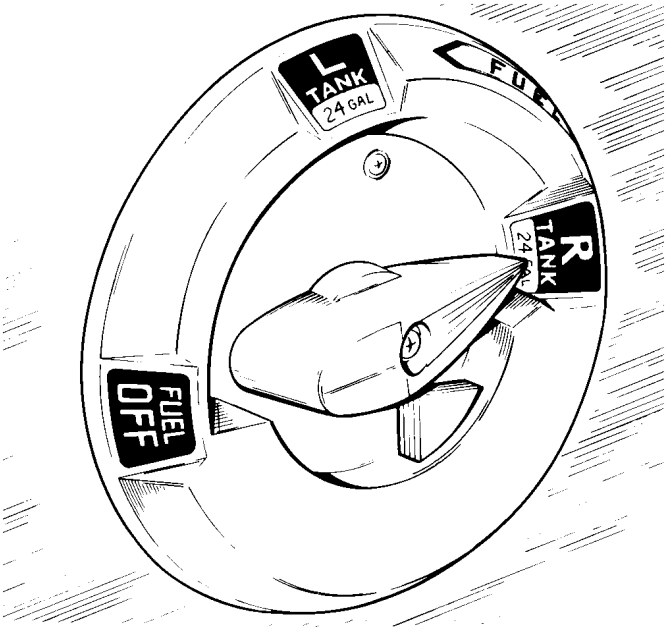

FUEL SELECTOR
Figure 7-11

7.19 FUEL SYSTEM (continued)

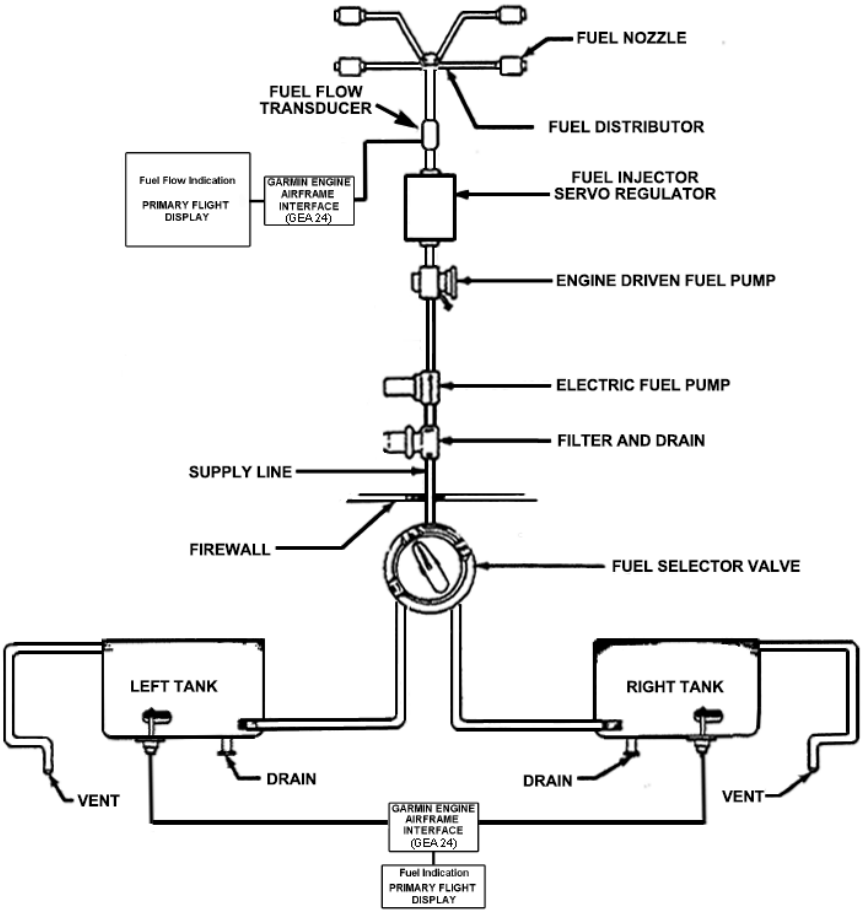

FUEL SYSTEM SCHEMATIC
- Fuel Injected Engine -
Figure 7-13

7.21 ELECTRICAL SYSTEM

The 28 volt electrical system includes a 24 volt primary battery, a 70 ampere 28 volt alternator, and a single external power connector. The electrical system is capable of supplying sufficient current to all the required equipment for day/night IFR operations.

Primary battery

The primary battery provides electric power to the equipment when the engine is not running and for engine starting. When energized by the battery master switch, the primary battery supplies electrical power to the starter as well as all items on the Essential Bus. If it becomes necessary to charge the battery by an external source, it should be removed from the airplane prior to charging. The primary battery is mounted on a shelf forward of the firewall.

Alternator

The alternator is belt driven directly from the engine. Once the engine is running and the ALTR switch is activated, the alternator becomes the primary source of electrical power for the aircraft. The primary battery provides stored electrical power to back up the alternator. During normal operations, the battery is charged by the alternator.

Voltage regulator

A solid state voltage regulator is located just forward of the instrument panel on the left side of the aircraft. The voltage regulator is designed to regulate the electrical system bus voltage to 28 volts and to prevent damage to the electrical and avionics equipment by removing the alternator from the circuit if its output exceeds 32 volts. In this situation an ALTR FAIL warning CAS message will illuminate.

7.21 ELECTRICAL SYSTEM (continued)

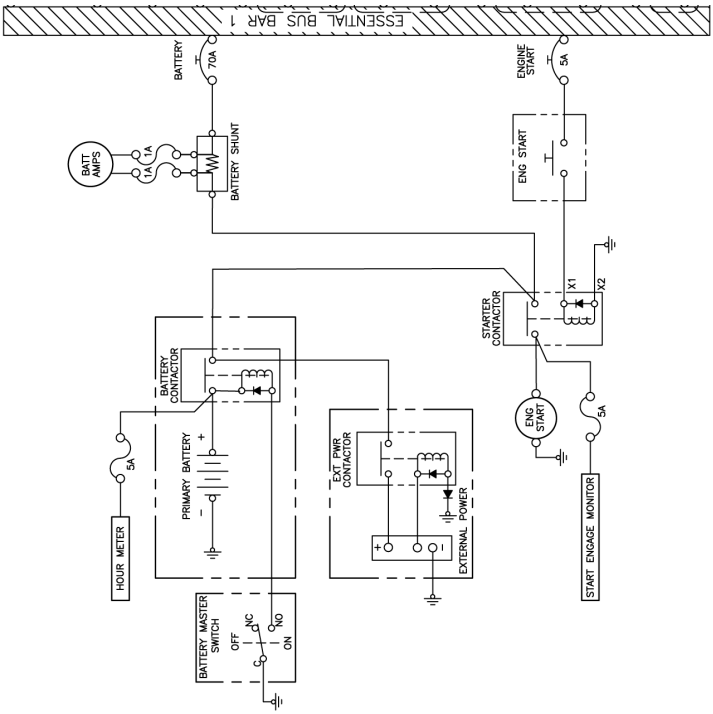

ALTERNATOR AND STARTER SCHEMATIC
Figure 7-15
Sheet 1 of 2

7.21 ELECTRICAL SYSTEM (continued)

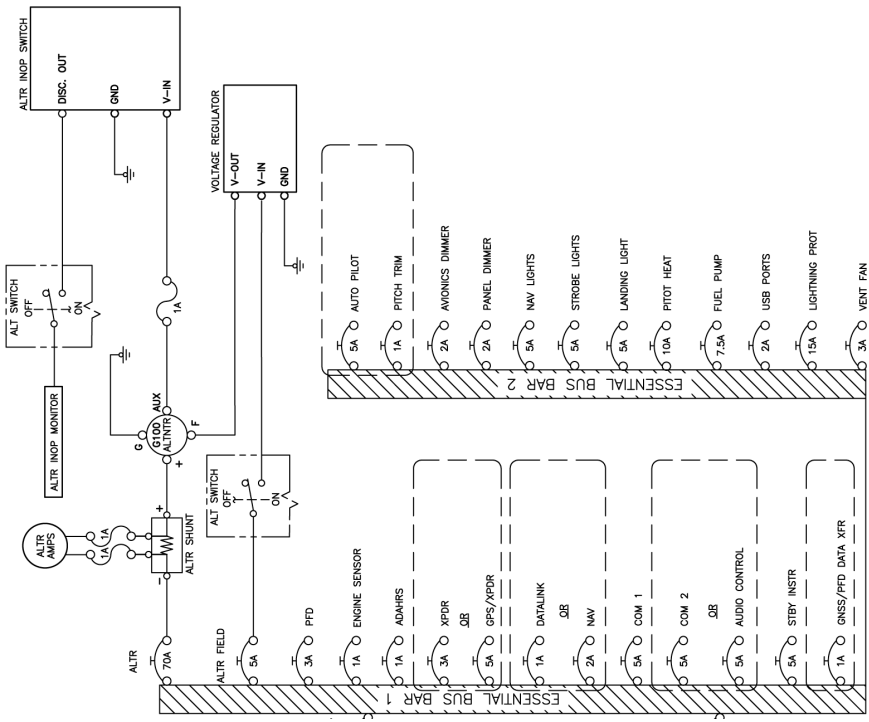

ALTERNATOR AND STARTER SCHEMATIC
Figure 7-15
Sheet 2 of 2

7.21 ELECTRICAL SYSTEM (continued)

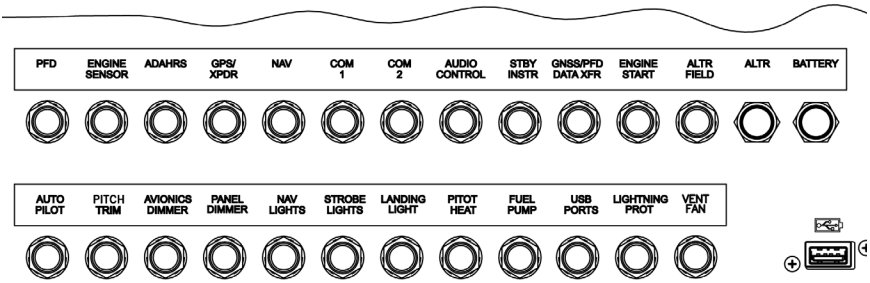

CIRCUIT BREAKER PANEL
(circuit breaker labels may vary depending on optional equipment installed)
Figure 7-17

7.23 INSTRUMENT PANEL

The instrument panel, shown in Figure 7-19, is designed to accommodate the Garmin G3X Touch avionics suite, including the Garmin G5 standby instrument, the optional GFC 500 autopilot, and all required switches.

Switches

WARNING

Anti-collision (strobe) lights should not be operating when flying through cloud, fog or haze, since the reflected light can produce spatial disorientation. Strobe lights should not be used in close proximity to the ground such as during taxi, takeoff or landing.

All powerplant, electrical power source, fuel pump, pitot heat, exterior lighting, and vent fan switches are grouped together on the instrument panel to the left of the throttle quadrant. The engine magneto, battery master, and alternator switches have detents in the OFF/ON positions which require the pilot to pull outward prior to moving the switch to a new position. Interior lighting switches are located above and to the right of the throttle quadrant. The circuit breaker panel is located on the lower right side of the instrument panel. Each breaker (Figure 7-17) is clearly marked to show which circuit it protects.

Optimum cockpit lighting for night flight is achieved by the use of two rotary-style dimming switches and an ON/OFF toggle switch for the white LED map light. The switch labeled AVIONICS controls the lighting intensity of the electronic display units. The full counter-clockwise position activates the photocell mode, whereby the lighting intensity adjusts itself based on ambient lighting. The switch labeled PANEL controls the lighting intensity of the red LED light strip and white LED map light under the glareshield. For both dimmer switches, clockwise rotation increases lighting intensity.

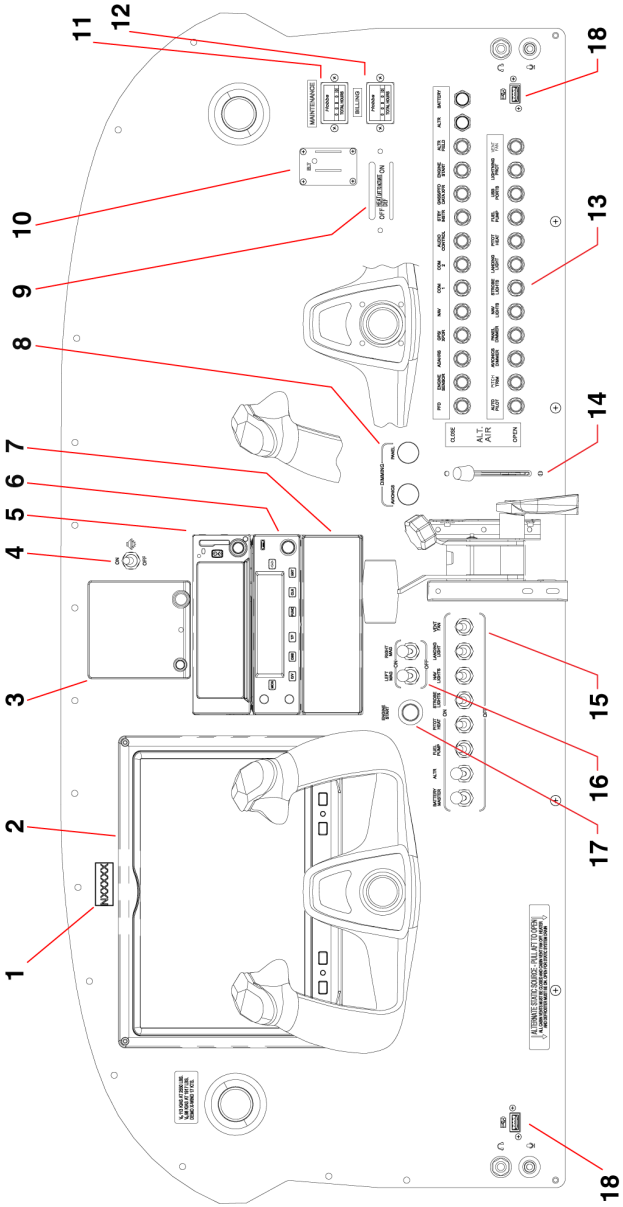

Note - See next page for itemized list of components /switches.

INSTRUMENT PANEL
Figure 7-19

1. Plate - Aircraft Registration Number
2. PFD (MFD on right half in split screen mode)
3. Standby Instrument
4. Map Light switch
5. Transponder
   a) GNX 375 (100i)
6 Com/Nav
   a) GNC 255A (100i)
7. GMC 507 Autopilot Mode Controller (100i)
8. Dimming Rheostats
9. Heat/Defrost Control Levers
10. ELT switch
11. HOBBS meter - Maintenance (optional)
12. HOBBS meter - Billing (optional)
13. Circuit breakers
14. Alternate Air
15. Electrical accessories switches (L to R)
    a) Battery Master
    b) Alternator
    c) Fuel Pump
    d) Pitot Heat
    e) Strobe Lights
    f) Nav Light
    g) Landing Light
    h) Ventilation Fan
16. Magneto Switches (L & R)
17. Engine Start switch
18. USB Port

Figure 7-19 (continued)

7.25 PITOT-STATIC SYSTEM

Total and static pressures are both supplied by a single pitot head installed on the bottom of the left wing. Independent pressure lines plumbed from the pitot mast through the wing and fuselage connect to the Garmin ADAHRS behind the instrument panel and to the Garmin G5 standby instrument (refer Figure 7-21) located on the instrument panel.

An alternate static source is standard equipment. The control valve is located below the left side of the instrument panel. When the valve is set in the alternate position, the altimeter, vertical speed indicator and airspeed indicator on the PFD and G5 standby instrument will be using cabin air for static pressure. The vent fan must be off, cabin vents must be closed and the cabin heater and defroster must be on during alternate static source operation. The altimeter error is less than 50 feet unless otherwise placarded.

Both the pitot and static lines can be drained through separate drain valves located on the left lower side of the fuselage interior.

A heated pitot head, which alleviates problems with icing and heavy rain, is standard equipment. The switch for the heated pitot head is located on the instrument panel above and to the left of the throttle quadrant.

To prevent bugs and water from entering the pitot and static pressure holes, a cover should be placed over the pitot head on the ground when the aircraft is parked. A partially or completely blocked pitot head will give erratic or zero readings on the instruments.

NOTE

During the preflight, check to make sure the pitot cover is removed.

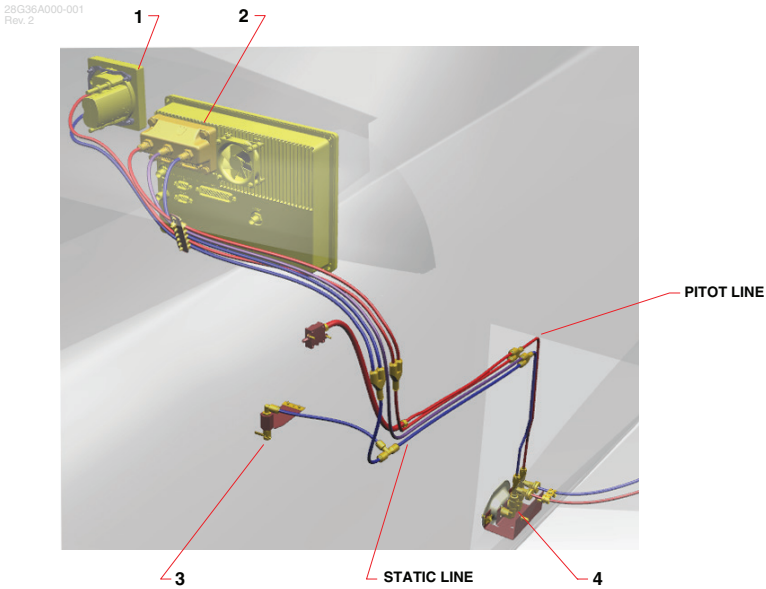

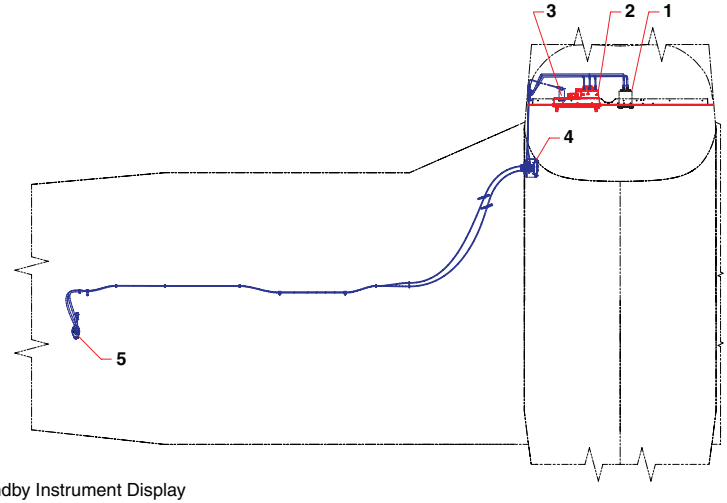

1. Standby Instrument Display
2. Air Data Attitude and Heading Reference System (ADAHRS)
3. Alternate Static Valve
4. Pitot/Static Drain Valves
5. Pitot Head

PITOT-STATIC SYSTEM
Figure 7-21

7.27 HEATING AND VENTILATING SYSTEM

CAUTION

When cabin heat is operated, the heat duct surface becomes hot. This could result in burns if arms or legs are placed too close to the heat duct outlets or surface.

Heat for the cabin interior and the defroster system is provided by a heater muff attached to the exhaust system (Figure 7-23). The amount of heat desired can be regulated with the control levers located on the far right side of the instrument panel. The air flow to the front and rear of the cabin can be regulated by two levers located on the floor adjacent to the flap handle.

Fresh air inlets are located on the inboard leading edge of each wing. The fresh air is distributed to adjustable outlets located in the fore and aft cabin along the left and right cabin walls near the floor.

The aircraft also has a forced, fresh air system. An axial fan behind the instrument panel draws fresh air through an intake on the right side of the fuselage just forward of the cabin door and exhausts the air through flexible ducts to air vents located on the left and right sides of the instrument panel. The vents can be manually adjusted to provide optimal air flow.

Cabin air is exhausted through an outlet under the rear seat.

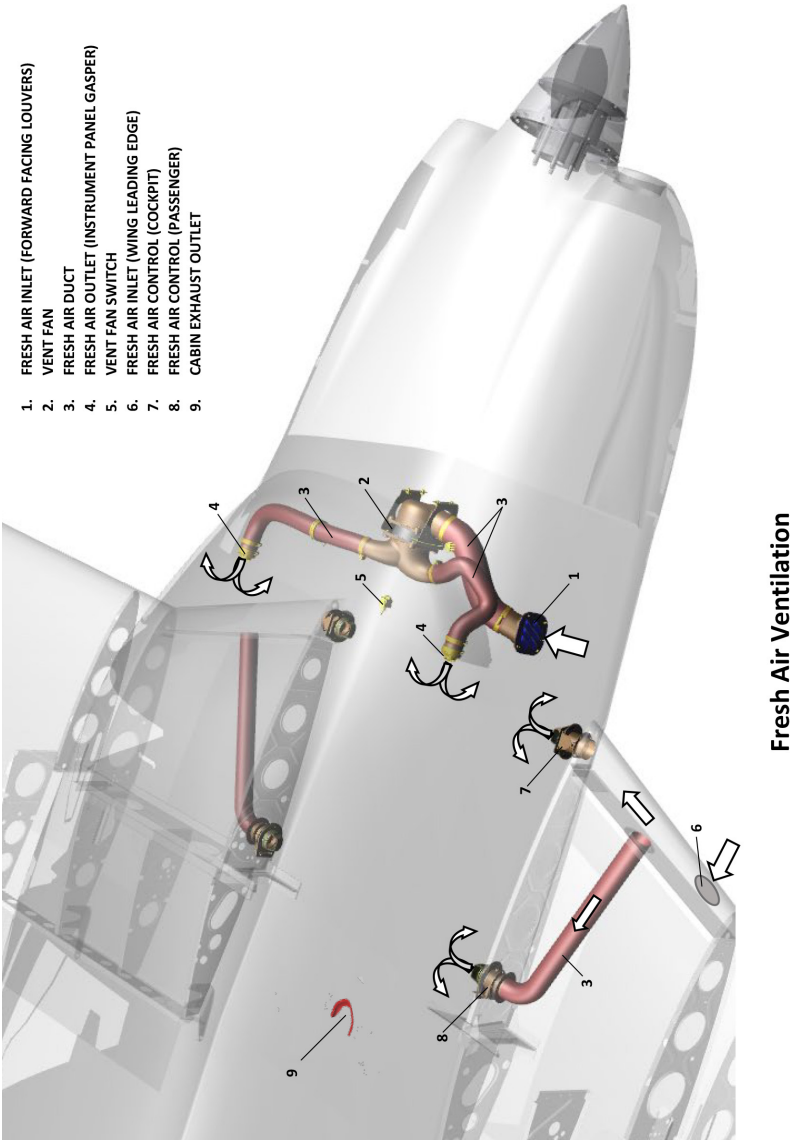

HEATING AND VENTILATING SYSTEM
Figure 7-23
Sheet 1 of 2

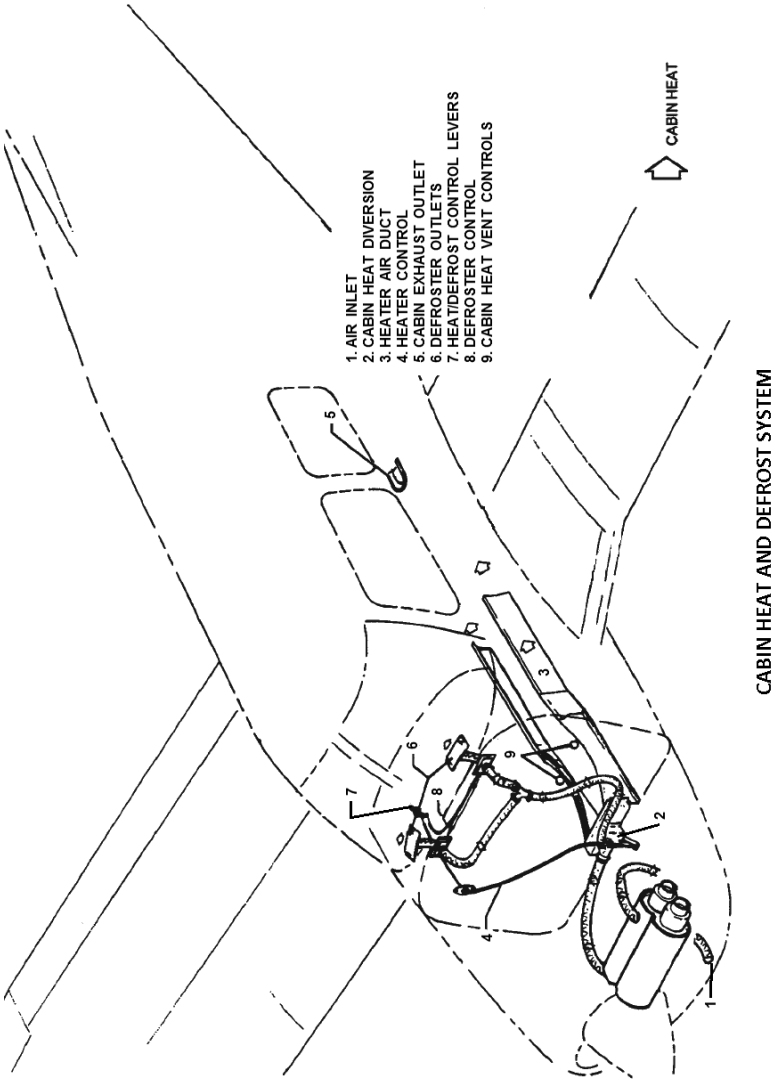

HEATING AND VENTILATING SYSTEM
Figure 7-23
Sheet 2 of 2

7.29 CABIN FEATURES

The Piper Pilot is equipped with two front seats and a third seat located in the center of the aft cabin. For occupant comfort and easy of entry, the pilot and co-pilot seats are adjustable horizontally and vertically. The horizontal adjustment bar is located just below the seat pan. Vertical adjustment is accomplished through a knob under the forward right hand corner of the seat pan. To recline pilot and co-pilot seats; lean backrest forward, then release the lever on the lower, inboard hinge, and re-adjust backrest to the desired reclined comfort setting.

The rear passenger seat has an adjustable backrest. Lean backrest forward, then release the lever on the lower, right hand hinge, and readjust backrest to desired reclined comfort setting.

CAUTION

Ensure all occupied seat backrests are in their full upright position for all taxi, take-off and landing operations.

The cabin interior includes a map pocket on the sidewall adjacent to the co-pilot's right leg, pockets on the backs of each front seat, and a documents pocket on the right sidewall adjacent to the aft seat.

Each seat is equipped with a three point restraint system consisting of an adjustable lap belt with an adjustable inertial reel-type shoulder harness. A check of the inertia reel mechanism can be made by pulling sharply on the shoulder strap and checking that the reel will lock in place under sudden stress. This locking feature prevents the strap from extending and holds the occupant in place. Under normal movement the strap will extend and retract as required.

7.31 STALL WARNING

An approaching stall is indicated by a stall warning tone which is activated between five and ten knots above stall speed. Mild airframe buffeting and gentle pitching may also precede the stall. The power off stall speeds are shown on the Stall Speed graph in Section 5. The stall warning tone is activated by a lift detector on the leading edge of the left wing. Whenever the stall warning system is activated, a continuous stall warning tone is generated by a Sonalert located behind the instrument panel. During preflight inspection, the stall warning system should be checked by turning the BATTERY MASTER switch on, lifting the detector and verifying that the stall warning tone is heard.

7.33 FINISH

All exterior surfaces are primed with etching primer and finished with a polyurethane finish.

7.35 EXTERNAL POWER

An external power installation is accessible through a receptacle located on the right side of the fuselage aft of the wing. A 24-28 VDC external power source can be connected to the socket, thus allowing the operator to crank the engine without having to gain access to the airplane's battery.

7.37 EMERGENCY LOCATOR TRANSMITTER

The Emergency Locator Transmitter (ELT), is located in the aft portion of the fuselage just below the stabilator leading edge and is accessible through a plate on the right side of the fuselage. This plate is attached with slotted-head nylon screws for ease of removal; these screws may be readily removed with a variety of common items such as a dime, a key, a knife blade, etc. If there are no tools available in an emergency the screw heads may be broken off by any means.

A battery replacement date is marked on the transmitter. To comply with FAA regulations, the battery must be replaced on or before this date. The battery must also be replaced if the transmitter has been used in an emergency situation or if the accumulated test time exceeds one hour, or if the unit has been inadvertently activated for an undetermined time period.

NOTE

If for any reason a test transmission is necessary, the test transmission should be conducted only in the first five minutes of any hour and limited to three audio sweeps. If the tests must be made at any other time, the tests should be coordinated with the nearest FAA tower or flight service station.

7.37 EMERGENCY LOCATOR TRANSMITTER (continued)

ACR ARTEX ELT 1000 OPERATION

There is a three position switch (placarded ON ARM/OFF, and TEST) on the ELT unit in the tailcone. The switch is set to ARM/OFF when the ELT is installed at the factory, and it should remain in that position whenever the unit is installed in the airplane.

A remote switch (placarded ON ARM/OFF, and TEST) is located on the copilot's instrument panel to allow the transmitter to be armed or turned on from inside the cabin. The switch is normally in ARM /OFF position. Moving the switch to ON will activate the transmitter. A warning light located above the remote switch will alert you whenever the ELT is activated.

The ACR ARTEX ELT 1000 (406 MHz) is equipped with a warning buzzer. This warning buzzer, which receives power from the ELT itself, is mounted in the tailcone. Whenever the ELT is activated the buzzer "beeps" periodically. The time between pulses lengthens after 12 hours. The objective is to hear the buzzer from outside the aircraft whenever the engine is not running.

Should the ELT be activated inadvertently, it can be reset by either positioning the cockpit remote switch or the switch on the ELT unit to ON then immediately switching it to the ARM position. The ELT cannot be reset if either the cockpit remote switch or the switch on the ELT unit is in the ON position.

7.37 EMERGENCY LOCATOR TRANSMITTER (continued)

ACR ARTEX ELT 1000 OPERATION (continued)

The transmitter can be activated manually at any time by placing either the remote switch or the ELT switch to the ON position.

NOTE

A monthly functional check is recommended to verify operational status of the ELT. Prior to testing, the aircraft must be located to receive GPS signals with avionics on. Within the first 5 minutes after the hour, select the cockpit remote switch to the test position for ~ 1 second and then return to the ARM/OFF position. The remote switch LED light and buzzer should then activate for ~ 2 seconds. If the 2 second LED light and buzzer indication is not received, refer to the ACR ARTEX ELT 1000 maintenance manual.

The ACR ARTEX ELT 1000 should be checked during postflight to make certain the unit has not been activated. Check by selecting 121.50 MHz on an operating receiver. If a downward sweeping audio tone is heard the ELT may have been activated. Set the remote switch to ON. If there is no change in the volume of the signal, your airplane's ELT is probably transmitting. Setting the remote switch back to ARM/OFF will automatically reset the ELT and should stop the signal being received on 121.50 MHz.

THIS PAGE INTENTIONALLY LEFT BLANK

TABLE OF CONTENTS

SECTION 8

AIRPLANE HANDLING, SERVICING AND MAINTENANCE

Paragraph No.		Page No.
8.1	General	8-1
8.3	Airplane Inspection Periods	8-4
8.5	Preventive Maintenance	8-5
8.7	Airplane Alterations	8-6
8.9	Ground Handling	8-7
8.11	Engine Air Filter	8-10
8.13	Brake Service	8-10
8.15	Landing Gear Service	8-12
8.17	**Reserved**	8-12
8.19	Oil Requirements	8-13
8.21	Fuel System	8-13
8.23	Tire Inflation	8-16
8.25	Battery Service	8-16
8.27	Cleaning	8-17
8.29	Cold Weather Operation	8-19

THIS PAGE INTENTIONALLY LEFT BLANK

SECTION 8

AIRPLANE HANDLING, SERVICING, AND MAINTENANCE

8.1 GENERAL

This section provides guidelines relating to the handling, servicing, and maintenance of the Piper Pilot. For complete maintenance instructions, refer to the PA-28-181 Maintenance Manual.

WARNING

Inspection, maintenance and parts requirements for all non-PIPER approved STC installations are not included in this handbook. When a non-PIPER approved STC installation is incorporated on the airplane, those portions of the airplane affected by the installation must be inspected in accordance with the inspection program published by the owner of the STC. Since non-PIPER approved STC installations may change systems interface, operating characteristics and component loads or stresses on adjacent structures, PIPER provided inspection criteria may not be valid for airplanes with non-PIPER approved STC installations.

WARNING

Modifications must be approved in writing by PIPER prior to installation. Any and all other installations, whatsoever, of any kind will void this warranty in it's entirety.

8.1 GENERAL (continued)

WARNING

Use only genuine PIPER parts or PIPER approved parts obtained from PIPER approved sources, in connection with the maintenance and repair of PIPER airplanes.

Genuine PIPER parts are produced and inspected under rigorous procedures to ensure airworthiness and suitability for use in PIPER airplane applications. Parts purchased from sources other than PIPER, even though identical in appearance, may not have had the required tests and inspections performed, may be different in fabrication techniques and materials, and may be dangerous when installed in an airplane.

Additionally, reworked or salvaged parts or those parts obtained from non-PIPER approved sources, may have service histories which are unknown or cannot be authenticated, may have been subjected to unacceptable stresses or temperatures or may have other hidden damage not discernible through routine visual or nondestructive testing. This may render the part, component or structural assembly, even though originally manufactured by PIPER, unsuitable and unsafe for airplane use.

PIPER expressly disclaims any responsibility for malfunctions, failures, damage or injury caused by use of non-PIPER approved parts.

8.1 GENERAL (continued)

Every owner should stay in close contact with an authorized Piper Service Center or Piper's Customer Service Department to obtain the latest information pertaining to their airplane, and to avail themselves of Piper's support systems.

Piper takes a continuing interest in having owners get the most efficient use from their airplane and keeping it in the best mechanical condition. Consequently, Piper, from time to time, issues service releases including Service Bulletins, Service Letters, Service Spares Letters, and others relating to the airplane.

Piper Service Bulletins are of special importance and Piper considers compliance mandatory. These are available on the Piper.com website. Depending on the nature of the release, material and labor allowances may apply. This information is provided to all authorized Piper Service Centers.

Service Letters deal with product improvements and servicing techniques pertaining to the airplane. They are available on the Piper.com website. Owners should give careful attention to Service Letter information.

Service Spares Letters offer improved parts, kits, and optional equipment which were not available originally, and which may be of interest to the owner.

Maintenance manuals, parts catalogs, and revisions to both, are available from Piper Service Centers.

Any correspondence regarding the airplane should include the airplane model and serial number to ensure proper response.

8.3 AIRPLANE INSPECTION PERIODS

WARNING

All inspection intervals, replacement time limits, overhaul time limits, the method of inspection, life limits, cycle limits, etc., recommended by PIPER are solely based on the use of new, remanufactured or overhauled PIPER approved parts. If parts are designed, manufactured, remanufactured, overhauled and/or approved by entities other than PIPER, then the data in PIPER'S maintenance/service manuals and parts catalogs are no longer applicable and the purchaser is warned not to rely on such data for non-PIPER parts. All inspection intervals, replacement time limits, overhaul time limits, the method of inspection, life limits, cycle limits, etc., for such non-PIPER parts must be obtained from the manufacturer and/or seller of such non-PIPER parts.

Piper has developed inspection items and required inspection intervals for the PA-28-181 (see the latest revision of the PA-28-181 Maintenance and Inspection Manuals). The PA-28-181 Inspection Manual contains appropriate forms, and all inspection procedures should be complied with by a properly trained, knowledgeable, and qualified mechanic at a Piper Authorized Service Center or a reputable repair shop. Piper cannot accept responsibility for the continued airworthiness of any aircraft not maintained to these standards, and/or not brought into compliance with applicable Service Bulletins issued by Piper, instructions issued by the engine, propeller, or accessory manufacturers, or Airworthiness Directives issued by the FAA.

A programmed Inspection, approved by the Federal Aviation Administration (FAA), is also available to the owner. This involves routine and detailed inspections to allow maximum utilization of the airplane. Maintenance inspection costs are reduced, and the maximum standard of continued airworthiness is maintained. Complete details are available from Piper.

In addition, but in conjunction with the above, the FAA requires periodic inspections on all aircraft to keep the Airworthiness Certificate in effect. The owner is responsible for assuring compliance with these inspection requirements and for maintaining proper documentation in logbooks and/or maintenance records.

8.3 AIRPLANE INSPECTION PERIODS (continued)

A spectrographic analysis of the engine oil is available from several sources. This inspection, if performed properly, provides a good check of the internal condition of the engine. To be accurate, induction air filters must be cleaned or changed regularly, and oil samples must be taken and sent in at regular intervals.

8.5 PREVENTIVE MAINTENANCE

The holder of a pilot certificate issued under Federal Aviation Regulations (FAR) Part 61 may perform certain preventive maintenance as defined in the FARs. This maintenance may be performed only on an aircraft which the pilot owns and operates, and which is not used in air carrier or air taxi/commercial operations service.

All other maintenance must be accomplished by a person or facility appropriately certificated by the Federal Aviation Administration (FAA) to perform that work.

Anytime maintenance is accomplished, an entry must be made in the appropriate aircraft maintenance records. The entry shall include:

(a) The date the work was accomplished.
(b) Description of the work.
(c) Number of hours on the aircraft.
(d) The certificate number of pilot performing the work.
(e) Signature of the individual doing the work.

8.7 AIRPLANE ALTERATIONS

If the owner desires to have their aircraft modified, they must obtain FAA approval for the alteration. Major alterations accomplished in accordance with Advisory Circular 43.13-2, when performed by an A & P mechanic, may be approved by the local FAA office. Major alterations to the basic airframe or systems not covered by AC 43.13-2 require a Supplemental Type Certificate.

The owner or pilot is required to ascertain that the following Aircraft Papers are in order and in the aircraft.

(a) To be displayed in the aircraft at all times:

(1) Aircraft Airworthiness Certificate Form FAA-8100-2.

(2) Aircraft Registration Certificate Form FAA-8050-3.

(3) Aircraft Radio Station License if transmitters are installed.

(b) To be carried in the aircraft at all times:

(1) Pilot's Operating Handbook.

(2) Weight and Balance data plus a copy of the latest Repair and Alteration Form FAA-337, if applicable.

(3) Aircraft equipment list.

Although the aircraft and engine logbooks are not required to be in the aircraft, they should be made available upon request. Logbooks should be complete and up to date. Good records will reduce maintenance cost by giving the mechanic information about what has or has not been accomplished.

8.9 GROUND HANDLING

(a) Towing

The airplane may be moved on the ground by the use of the nose wheel steering bar that is stowed in the cabin on the forward side of the wing spar or by power equipment that will not damage or excessively strain the nose gear steering assembly. Towing lugs are incorporated as part of the nose gear fork.

CAUTION

When towing with power equipment, do not turn the nose gear beyond its steering radius in either direction, as this will result in damage to the nose gear and steering mechanism.

CAUTION

Do not tow the airplane when the controls are secured.

In the event towing lines are necessary, ropes should be attached to both main gear struts as high up on the tubes as possible. Lines should be long enough to clear the nose and/or tail by not less than fifteen feet, and a qualified person should ride in the pilot's seat to maintain control by use of the brakes.

(b) Taxiing

When it is ascertained that the propeller back blast and taxi areas are clear, power should be applied to start the taxi roll, and the following checks should be performed:

(1) Taxi a few feet forward and apply the brakes to determine their effectiveness.
(2) While taxiing, make slight turns to ascertain the effectiveness of the steering.
(3) Observe wing clearance when taxiing near buildings or other stationary objects. If possible, station an observer outside the airplane.

8.9 GROUND HANDLING (continued)

(b) Taxiing (continued)

(4) When taxiing over uneven ground, avoid holes and ruts.

(5) Do not operate the engine at high RPM when running up or taxiing over ground containing loose stones, gravel, or any loose material that may cause damage to the propeller blades.

(c) Parking

When parking the airplane, be sure that it is sufficiently protected from adverse weather conditions and that it presents no danger to other aircraft. When parking the airplane for any length of time or overnight, it is suggested that it be moored securely.

(1) To park the airplane, head it into the wind if possible.

(2) Set the parking brake by pulling back on the brake lever and depressing the knob on the handle. To release the parking brake, pull back on the handle until the catch disengages; then allow the handle to swing forward.

CAUTION

Care should be taken when setting brakes that are overheated or during cold weather when accumulated moisture may freeze a brake.

(3) Aileron and stabilator controls should be secured with the front seat belt and chocks used to properly block the wheels.

8.9 GROUND HANDLING (continued)

(d) Mooring

The airplane should be moored for immovability, security and protection. The following procedures should be used for the proper mooring of the airplane:

(1) Head the airplane into the wind if possible.

(2) Retract the flaps.

(3) Immobilize the ailerons and stabilator by looping the seat belt through the control wheel and pulling it snug.

(4) Block the wheels.

(5) Secure tie-down ropes to the wing tie-down rings and to the tail skid at approximately 45 degree angles to the ground. When using rope of non-synthetic material, leave sufficient slack to avoid damage to the airplane should the ropes contract.

NOTE

Additional preparations for high winds include using tie-down ropes from the landing gear forks and securing the rudder.

(6) Install a pitot head cover if available. Be sure to remove the pitot head cover before flight.

(7) Cabin and baggage doors should be locked when the airplane is unattended.

8.11 ENGINE AIR FILTER

Inspect inlet for foreign particles and obstructions. Engine Air Filter should be removed and inspected or replaced at intervals as outlined in the aircraft Maintenance Manual. Operations in severe environments may require more frequent attention.

8.13 BRAKE SERVICE

The brake system is filled with MIL-PRF-5606 (petroleum base) hydraulic brake fluid. The fluid level should be checked periodically or at every 50-hour inspection and replenished when necessary. The brake reservoir is located on the fire wall in the engine compartment.

No adjustment of the brake clearances is necessary. If after extended service brake blocks become excessively worn, they should be replaced with new segments.

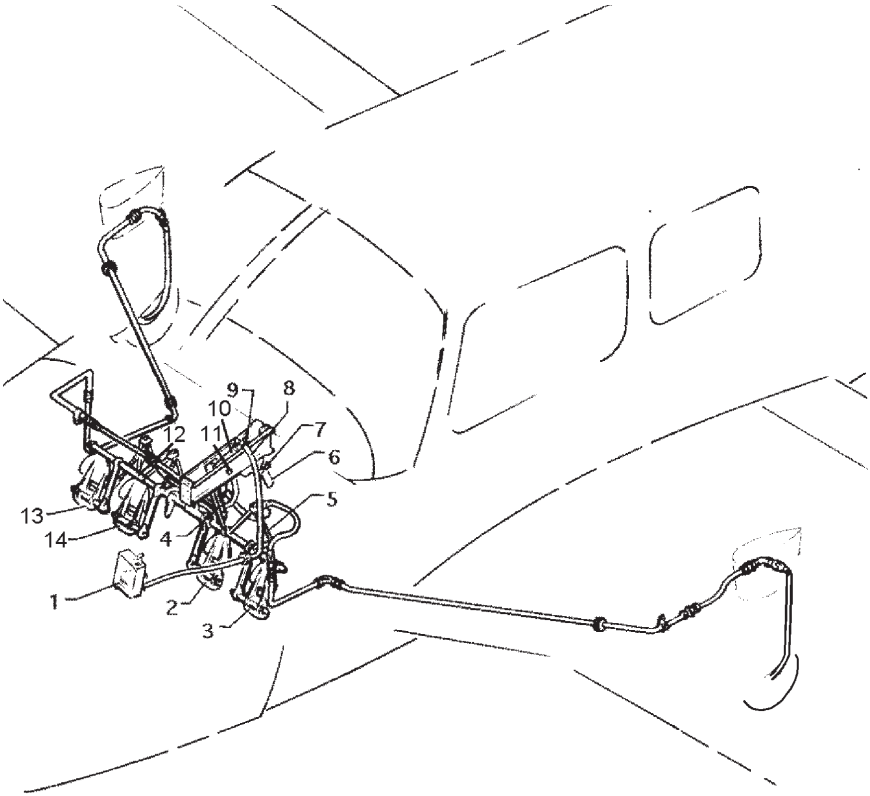

1. BRAKE RESERVOIR
2. RIGHT BRAKE AND RUDDER PEDAL
3. LEFT BRAKE AND RUDDER PEDAL
4. RIGHT BRAKE CYLINDER
5. LEFT BRAKE CYLINDER
6. BRAKE HANDLE
7. HANDLE RELEASE BUTTON
8. LINE, INLET
9. CLEVIS PIN
10. MASTER CYLINDER ASSEMBLY
11. BOLT ASSEMBLY
12. TORQUE TUBE
13. COPILOT'S RIGHT BRAKE AND RUDDER PEDAL
14. COPILOT'S LEFT BRAKE AND RUDDER PEDAL

BRAKE SYSTEM
Figure 8-1

8.15 LANDING GEAR SERVICE

The three landing gears use Cleveland Aircraft Products 6.00 x 6, four-ply rating, type III tires with tubes. (Refer to paragraph 8.23).

Landing gear oleos on the Piper Pilot should be serviced according to the instructions on the units. The main oleos should be extended under normal static load until 4.50 ± 0.50 inches of oleo piston tube is exposed, and the nose gear should show 3.25 ± 0.25 inches. Should the strut exposure be below that required, refer to Maintenance Manual for servicing instructions.

8.17 RESERVED

8.19 OIL REQUIREMENTS

The oil capacity of the engine is 8 quarts and the minimum safe quantity is 2 quarts. It is recommended that the oil be drained and renewed, and the screen cleaned, every 25 hours. However, if the full flow (cartridge type) oil filter is used, the oil and filter should be drained and renewed every 50 hours of operation. The interval between oil and oil filter change is not to exceed four (4) months.

8.21 FUEL SYSTEM

(a) Servicing Fuel System

At every 50 hour inspection, the fuel screens in the strainer, and at the fuel injection servo inlet must be cleaned.

(b) Fuel Requirements (AVGAS ONLY)

The minimum aviation grade fuel for the PA-28-181 is 100 or 100LL. Since the use of lower grades can cause serious engine damage in a short period of time, the engine warranty is invalidated by the use of lower octanes.

8.21 FUEL SYSTEM (continued)

(c) Filling Fuel Tanks

Observe all required precautions for handling gasoline. Fill the fuel tanks through the filler located on the forward slope of the wing. Each wing holds a maximum of 25 U.S. gallons. When using less than the standard 50 gallon capacity, fuel should be distributed equally between each tank. There is approximately 17 gallons in the fuel tank when fuel level is even with bottom of filler neck indicator.

(d) Draining Fuel Strainer, Sumps and Lines

The fuel tank sumps and strainer should be drained daily prior to the first flight and after refueling to avoid the accumulation of contaminant's such as water or sediment. Each fuel tank is equipped with an individual quick drain located at the lower inboard rear corner of the tank. The fuel strainer is equipped with a quick drain located on the front lower corner of the fire wall. Each of the fuel tank sumps should be drained first. Then the fuel strainer should be drained twice, once with the fuel selector valve on each tank. Each time fuel is drained, sufficient fuel should be allowed to flow to ensure removal of contaminant's. This fuel should be collected in a suitable container, examined for contaminant's, and then discarded.

CAUTION

When draining any amount of fuel, care should be taken to ensure that no fire hazard exists before starting the engine.

Each quick drain should be checked after closing it to make sure it has closed completely and is not leaking.

8.21 FUEL SYSTEM (continued)

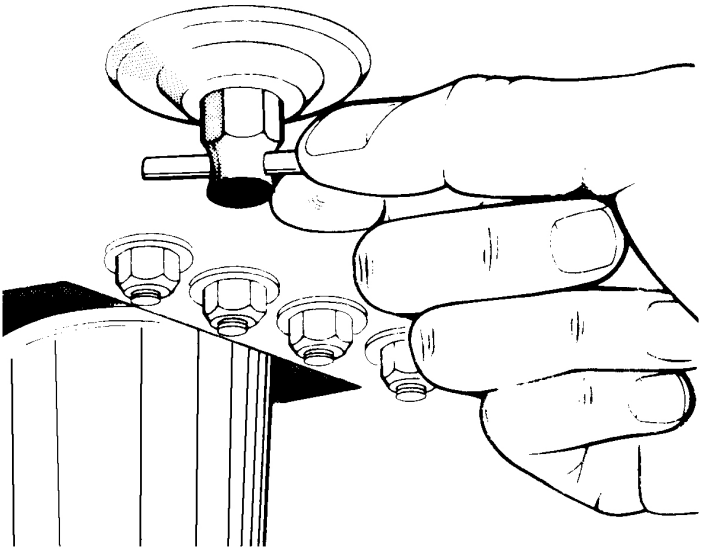

FUEL DRAIN
Figure 8-3

(e) Draining Fuel System

The bulk of the fuel may be drained from the system by opening the valve at the inboard end of each fuel tank. Push up on the arms of the drain valve and turn counterclockwise to hold the drain open. The remaining fuel in the system may be drained through the filter bowl. Any individual tank may be drained by closing the selector valve and then draining the desired tank.

CAUTION

Whenever the fuel system is completely drained and fuel is replenished it will be necessary to run the engine for a minimum of three minutes at 1000 RPM on each tank to ensure that no air exists in the fuel supply lines.

8.23 TIRE INFLATION

For maximum service from the tires, keep them inflated to the proper pressures - 18 psi for the nose gear and 24 psi for the main gear. All wheels and tires are balanced before original installation, and the relationship of tire, tube and wheel should be maintained upon reinstallation. Unbalanced wheels can cause extreme vibration in the landing gear; therefore, in the installation of new components, it may be necessary to rebalance the wheels with the tires mounted. When checking tire pressure, examine the tires for wear, cuts, bruises, and slippage.

8.25 BATTERY SERVICE

The 24 volt battery is located on the firewall in the engine compartment. Refer to Maintenance Manual for Battery Servicing Instructions.

8.27 CLEANING

(a) Cleaning Landing Gear

Before cleaning the landing gear, place a plastic cover or similar material over the wheel and brake assembly.

(1) Place a pan under the gear to catch waste.
(2) Spray or brush the gear area with solvent or a mixture of solvent and degreaser, as desired. Where heavy grease and dirt deposits have collected, it may be necessary to brush areas that were sprayed, in order to clean them.
(3) Allow the solvent to remain on the gear from five to ten minutes. Then rinse the gear with additional solvent and allow to dry.
(4) Remove the cover from the wheel and remove the catch pan.
(5) Lubricate the gear in accordance with the Lubrication Chart.

(b) Cleaning Exterior Surfaces

The airplane should be washed with a mild soap and water. Harsh abrasives or alkaline soaps or detergents could make scratches on painted or plastic surfaces or could cause corrosion of metal. Cover areas where cleaning solution could cause damage. To wash the airplane, use the following procedure:

(1) Flush away loose dirt with water.
(2) Apply cleaning solution with a soft cloth, a sponge or soft bristle brush.
(3) To remove exhaust stains, allow the solution to remain on the surface longer.
(4) To remove stubborn oil and grease, use a cloth dampened with naphtha.
(5) Rinse all surfaces thoroughly.
(6) Any good automotive wax may be used to preserve painted surfaces. Soft cleaning cloths or a chamois should be used to prevent scratches when cleaning or polishing. A heavier coating of wax on the leading surfaces will reduce the abrasion problems in these areas.

8.27 CLEANING (continued)

(c) Cleaning Windshield and Windows

(1) Remove dirt, mud and other loose particles from exterior surfaces with clean water.
(2) Wash with mild soap and warm water or with aircraft plastic cleaner. Use a soft cloth or sponge in a straight back and forth motion. Do not rub harshly.
(3) Remove oil and grease with a cloth moistened with kerosene.

CAUTION

Do not use gasoline, alcohol, benzene, carbon tetrachloride, thinner, acetone, or window cleaning sprays.

(4) After cleaning plastic surfaces, apply a thin coat of hard polishing wax. Rub lightly with a soft cloth. Do not use a circular motion.
(5) A severe scratch or mar in plastic can be removed by rubbing out the scratch with jeweler's rouge. Smooth both sides and apply wax.

(d) Cleaning Headliner, Side Panels and Seats

(1) Clean headliner, side panels, and seats with a stiff bristle brush, and vacuum where necessary.
(2) Soiled upholstery may be cleaned with a good upholstery cleaner suitable for the material. Carefully follow the manufacturer's instructions. Avoid soaking or harsh rubbing.

CAUTION

Solvent cleaners require adequate ventilation.

8.27 CLEANING (continued)

(e) Cleaning Floor Coverings

To clean carpets, first remove loose dirt with a whisk broom or vacuum. Clean using mild soap and water mixture and then rinse with water. Dry with white paper towels or terry cloth. Do not use any silicone or solvent based cleaner or conditioner (including Armor All Cleaner or Wipes). Floor coverings may be removed for cleaning. Floor carpets may be removed and cleaned like any household carpet.

8.29 COLD WEATHER OPERATION

For cold weather operation a winterization plate is installed on the inlet opening of the oil cooler duct on the left rear engine baffle. This plate should be installed whenever the ambient temperature reaches 50°F or less or whenever oil temperature cannot be maintained at or above 140°F during continuous operation. The plate should be removed when the ambient temperature exceeds 50°F.

THIS PAGE INTENTIONALLY LEFT BLANK

TABLE OF CONTENTS
SECTION 9
SUPPLEMENTS

Paragraph No.		Page No.
9.1	General	9-1
1	AMSAFE Inflatable Seat Restraints (STC SA02276AK)	9-3

THIS PAGE INTENTIONALLY LEFT BLANK

SECTION 9

SUPPLEMENTS

9.1 GENERAL

This section provides information in the form of Supplements which are necessary for efficient operation of the airplane when equipped with one or more of the various optional systems and equipment not approved with the standard airplane.

All of the supplements provided in this section are FAA Approved and consecutively numbered as a permanent part of this Handbook. The information contained in each Supplement applies only when the related equipment is installed in the airplane.

THIS PAGE INTENTIONALLY LEFT BLANK

PILOT'S OPERATING HANDBOOK
AND
FAA APPROVED AIRPLANE FLIGHT MANUAL

SUPPLEMENT NO. 1
FOR

AMSAFE INFLATABLE SEAT RESTRAINTS
(FAA STC SA02276AK)
(EASA STC 10031010)

The FAA approved operational supplement for the AMSAFE Inflatable Seat Restraints, installed in accordance with STC SA02276AK, is required for operation of this system. AMSAFE will be responsible to supply and revise the operational supplement. It is permitted to include the AMSAFE Inflatable Seat Restraints supplement in this location of the Pilot's Operating Handbook unless otherwise stated by AMSAFE. The information contained in the AMSAFE Inflatable Seat Restraints supplement may supersede or supplement the information in the basic Pilot's Operating Handbook and FAA Approved Airplane Flight Manual with respect to the operation of the AMSAFE Inflatable Seat Restraints system. For limitations, procedures and performance information not contained in the AMSAFE supplement, consult the basic Pilot's Operating Handbook and FAA Approved Airplane Flight Manual.

THIS PAGE INTENTIONALLY LEFT BLANK

TABLE OF CONTENTS
SECTION 10
OPERATING TIPS

Paragraph No.		Page No.
10.1	General	10-1
10.3	Operating Tips	10-1

THIS PAGE INTENTIONALLY LEFT BLANK

SECTION 10

OPERATING TIPS

10.1 GENERAL

This section provides operating tips of particular value in the operation of Piper Pilot.

10.3 OPERATING TIPS

(a) Learn to trim for takeoff so that only a very light back pressure on the control wheel is required to lift the airplane off the ground.

(b) The best speed for takeoff is about 57 KIAS under normal conditions. Trying to pull the airplane off the ground at too low an airspeed decreases the controllability of the airplane in the event of engine failure.

(c) Flaps may be lowered at airspeeds up to 102 KIAS. To reduce flap operating loads, it is desirable to have the airplane at a slower speed before extending the flaps. The flap step will not support weight if the flaps are in any extended position. The flaps must be placed in the "UP" position before they will lock and support weight on the step.

(d) The pilot should only reset a tripped circuit breaker if the system/component is considered essential for safety of flight. Prior to resetting the circuit breaker, wait at least one minute and verify there is no smoke or burning smell. If the circuit breaker opens a second time, leave the circuit breaker out. Have a maintenance inspection performed prior to resetting the circuit breaker. Do not reset any nonessential circuit breakers in flight.

(e) Before starting the engine, check that all non-required items (lights, vent fan, pitot heat) are in the off position so as not to create an overloaded condition when the starter is engaged.

10.3 OPERATING TIPS (continued)

(f) Anti-collision lights should not be operating when flying through cloud, fog or haze, since reflected light can produce spacial disorientation. Strobe lights should not be used in close proximity to the ground such as during taxiing, takeoff or landing.

(g) The rudder pedals are suspended from a torque tube which extends across the fuselage. The pilot should become familiar with the proper positioning of their feet on the rudder pedals so as to avoid interference with the torque tube when moving the rudder pedals or operating the toe brakes.

(h) In an effort to avoid accidents, pilots should obtain and study the safety related information made available in FAA publications such as regulations, advisory circulars, Aviation News, AIM and safety aids.

(i) Prolonged slips or skids which result in excess of 2000 ft. of altitude loss, or other radical or extreme maneuvers which could cause uncovering of the fuel outlet must be avoided as fuel flow interruption may occur when tank being used is not full.

(j) Hand starting of the engine is not recommended, however, should hand starting of the engine be required, only experienced personnel should attempt this procedure. The left magneto should be switched ON and the right magneto should be switched OFF during the starting procedure to reduce the probability of “kick back”. Switch the right magneto ON after the engine has started.